CALIFORNIA ENERGY CODES & STANDARDS

A STATEWIDE UTILITY PROGRAM

Title 24, Parts 6 and 11
Local Energy Efficiency Ordinances

2019 Mid-Rise New Construction Reach Code Cost-Effectiveness Study

Prepared for:
Kelly Cunningham
Codes and Standards Program
Pacific Gas and Electric Company

Prepared by:
Frontier Energy, Inc.
Misti Bruceri & Associates, LLC
EnergySoft

Last Modified: June 22, 2020

LEGAL NOTICE

This report was prepared by Pacific Gas and Electric Company and funded by the California utility customers under the auspices of the California Public Utilities Commission.

Copyright 2019, Pacific Gas and Electric Company. All rights reserved, except that this document may be used, copied, and distributed without modification.

Neither PG&E nor any of its employees makes any warranty, express or implied; or assumes any legal liability or responsibility for the accuracy, completeness or usefulness of any data, information, method, product, policy or process disclosed in this document; or represents that its use will not infringe any privately-owned rights including, but not limited to, patents, trademarks or copyrights.

Table of Contents

Acronyms ... iii
1 Introduction ... 1
2 Methodology and Assumptions ... 1
2.1 Building Prototypes ... 1
2.2 Measure Analysis ... 3
2.2.1 Federal Preemption ... 3
2.2.2 Energy Efficiency Measures ... 3
2.2.3 All Electric Measures ... 4
2.2.4 Renewable Energy ... 5
2.3 Package Development ... 6
2.4 Incremental Costs ... 6
2.4.1 Energy Efficiency Measure Costs ... 6
2.4.2 All Electric Measure Costs ... 8
2.4.3 Natural Gas Infrastructure Costs ... 9
2.5 Cost-effectiveness ... 10
2.5.1 On-Bill Customer Lifecycle Cost ... 11
2.5.2 TDV Lifecycle Cost ... 12
2.6 Greenhouse Gas Emissions ... 12
3 Results ... 13
3.1 Mid-Rise Multifamily Results ... 13
Efficiency Only: ... 13
Efficiency + PV: ... 14
4 Conclusions & Summary ... 20
5 References ... 22
Appendix A – California Climate Zone Map ... 24
Appendix B – Utility Tariff Details ... 25
Appendix C – PG&E Gas Infrastructure Cost Memo ... 47
Appendix D – Detailed Results Mixed-Fuel ... 50
Appendix E – Detailed Results All-Electric ... 53

List of Tables

Table 1: Prototype Characteristics 2
Table 2: Incremental Cost Assumptions 7
Table 3: Costs for Gas versus Electric Water Heating Equipment over 30-Year Period of Analysis....8
Table 4: Solar Thermal Detailed Costs over 30-Year Period of Analysis 9
Table 5: Natural Gas Infrastructure Cost Savings for All-Electric Building 9
Table 6: IOU Utility Tariffs Applied Based on Climate Zone 12
Table 7: Mixed-Fuel Package Results: Efficiency Only (SAVINGS/COST PER APARTMENT) 15
Table 8: Mixed-Fuel Package Results: PV + Efficiency 0.3 kW_{DC} per Apartment (SAVINGS/COST PER APARTMENT) 16
Table 9: All-Electric Package Results: Efficiency Only (SAVINGS/COSTS PER APARTMENT) 17
Table 10: All-Electric Package Results: PV + Efficiency 0.1 kW_{DC} per Apartment (SAVINGS/COSTS PER APARTMENT) 18
Table 11: Mixed-Fuel Measure Package Summary 19
Table 12: All-Electric Measure Package Summary 19
Table 13: Mid-Rise Multifamily Summary of Compliance Margin and Cost-Effectiveness 21
Table 14: PG&E Baseline Territory by Climate Zone 26
Table 15: PG&E Monthly Gas Rate ($/Therm) 26
Table 16: SCE Baseline Territory by Climate Zone 32
Table 17: SoCalGas Baseline Territory by Climate Zone 35
Table 18: SoCalGas Monthly Gas Rate ($/Therm) 35
Table 19: SDG&E Baseline Territory by Climate Zone 38
Table 20: SDG&E Monthly Gas Rate ($/Therm) 41
Table 22: Real Utility Rate Escalation Rate Assumptions 46
Table 23: Mixed-Fuel Efficiency Only Package Results (SAVINGS/COST PER APARTMENT)[1] 50
Table 24: Mixed-Fuel Efficiency + PV Package Results (SAVINGS/COST PER APARTMENT)[1] 51
Table 25: Mixed-Fuel Efficiency + PV Package Results , cont. (SAVINGS/COST PER APARTMENT)[1] 52

List of Figures

Figure 1: 5-story mid-rise multifamily prototype depiction. 2
Figure 2: Prescriptive central heat pump water heater system schematic. 5
Figure 3: Map of California climate zones. (Source, California Energy Commission) 24

Acronyms

2020 PV$	Present value costs in 2020
ACM	Alternative Calculation Method
B/C	Lifecycle Benefit-to-Cost Ratio
BSC	Building Standards Commission
CBECC-Com	Computer program developed by the California Energy Commission for use in demonstrating compliance with the California Residential Building Energy Efficiency Standards
CFI	California Flexible Installation
CFM	Cubic Feet per Minute
CPC	California Plumbing Code
CZ	California Climate Zone
DHW	Domestic Hot Water
DOE	Department of Energy
DWHR	Drain Water Heat Recovery
EDR	Energy Design Rating
EER	Energy Efficiency Ratio
EF	Energy Factor
EPS	Expanded Polystyrene
HERS Rater	Home Energy Rating System Rater
HPWH	Heat Pump Water Heater
HVAC	Heating, Ventilation, and Air Conditioning
IOU	Investor Owned Utility
kBtu	kilo-British thermal unit
kWh	Kilowatt Hour
kW_{DC}	Kilowatt Direct Current. Nominal rated power of a photovoltaic system
LBNL	Lawrence Berkeley National Laboratory
LCC	Lifecycle Cost
MF	Multifamily
NAECA	National Appliance Energy Conservation Act
NEM	Net Energy Metering
NPV	Net Present Value
PG&E	Pacific Gas and Electric Company
PV	Photovoltaic
SCE	Southern California Edison

SDG&E	San Diego Gas and Electric
SF	Solar Fraction
SHGC	Solar Heat Gain Coefficient
SMUD	Sacramento Municipal Utility District
CASE	Codes and Standards Enhancement
TDV	Time Dependent Valuation
Therm	Unit for quantity of heat that equals 100,000 British thermal units
Title 24	Title 24, Part 6
TOU	Time-Of-Use
UEF	Uniform Energy Factor
W	Watts

1 Introduction

The California Building Energy Efficiency Standards Title 24, Part 6 (Title 24) (California Energy Commission, 2018b) is maintained and updated every three years by two state agencies, the California Energy Commission (Energy Commission) and the Building Standards Commission (BSC). In addition to enforcing the code, local jurisdictions have the authority to adopt local energy efficiency ordinances, or reach codes, that exceed the minimum standards defined by Title 24 (as established by Public Resources Code Section 25402.1(h)2 and Section 10-106 of the Building Energy Efficiency Standards). Local jurisdictions must demonstrate that the requirements of the proposed ordinance are cost-effective and do not result in buildings consuming more energy than is permitted by Title 24. In addition, the jurisdiction must obtain approval from the Energy Commission and file the ordinance with the BSC for the ordinance to be legally enforceable.

This report documents cost-effective combinations of measures that exceed the minimum state requirements, the 2019 Building Energy Efficiency Standards, effective January 1, 2020, for new mid-rise (four- to seven-story) multifamily residential construction. The analysis includes evaluation of both mixed-fuel and all-electric residential construction, documenting that the performance requirements can be met by either type of building design. Compliance package options and cost-effectiveness analysis in all 16 California climate zones (CZs) are presented (see Appendix A – California Climate Zone Map for a graphical depiction of Climate Zone locations).

2 Methodology and Assumptions

This analysis uses two different metrics to assess cost-effectiveness. Both methodologies require estimating and quantifying the incremental costs and energy savings associated with energy efficiency measures. The main difference between the methodologies is the manner in which they value energy and thus the cost savings of reduced or avoided energy use:

- **Utility Bill Impacts (On-Bill)**: Customer-based Lifecycle Cost (LCC) approach that values energy based upon estimated site energy usage and customer on-bill savings using electricity and natural gas utility rate schedules over a 30-year duration accounting for discount rate and energy cost inflation.
- **Time Dependent Valuation (TDV)**: Energy Commission LCC methodology, which is intended to capture the "societal value or cost" of energy use including long-term projected costs, such as the cost of providing energy during peak periods of demand and other societal costs, such as projected costs for carbon emissions, as well as grid transmission and distribution impacts. This metric values energy use differently depending on the fuel source (gas, electricity, and propane), time of day, and season. Electricity used (or saved) during peak periods has a much higher value than electricity used (or saved) during off-peak periods (Horii et al., 2014). This is the methodology used by the Energy Commission in evaluating cost-effectiveness for efficiency measures in Title 24, Part 6.

2.1 Building Prototypes

The Energy Commission defines building prototypes which it uses to evaluate the cost-effectiveness of proposed changes to Title 24 requirements. The CEC recently developed new prototype designs for multifamily buildings to more closely reflect typical designs for new multifamily buildings across the state. The new prototypes include two low-rise residential designs, a mid-rise, and a high-rise design. At the time that this report was written, there was one mid-rise multifamily prototype, which is used in this analysis in development of the above-code packages (TRC, 2019). The midrise prototype is a 6-story building with one below-grade parking level, ground floor commercial space, and four stories of residential space. Table 1 describes the basic characteristics of the mid-rise prototype and Figure 1 shows a depiction of the building.

Table 1: Prototype Characteristics

Characteristic	Multifamily 5-Story Mid-Rise
Conditioned Floor Area	113,100 ft^2 Total: 33,660 ft^2 Nonresidential & 79,440 ft^2 Residential
Number of Stories	6 Stories Total: 1 Story Parking Garage (below grade) 1 Story of Nonresidential Space 4 Stories of Residential Space
Number of Dwelling Units / Bedrooms	(8) studios, (40) 1-bed units, (32) 2-bed units, & (8) 3-bed units
Foundation	Concrete podium with underground parking
Wall Assembly	Wood frame over a first-floor concrete podium
Roof Assembly	Flat roof
Window-to-Wall Area Ratio	22.5%
HVAC System	Ducted split heat pumps at each apartment
Domestic Hot Water System	Gas central boiler with solar thermal sized to meet the prescriptive requirements by climate zone

Source: TRC 2019

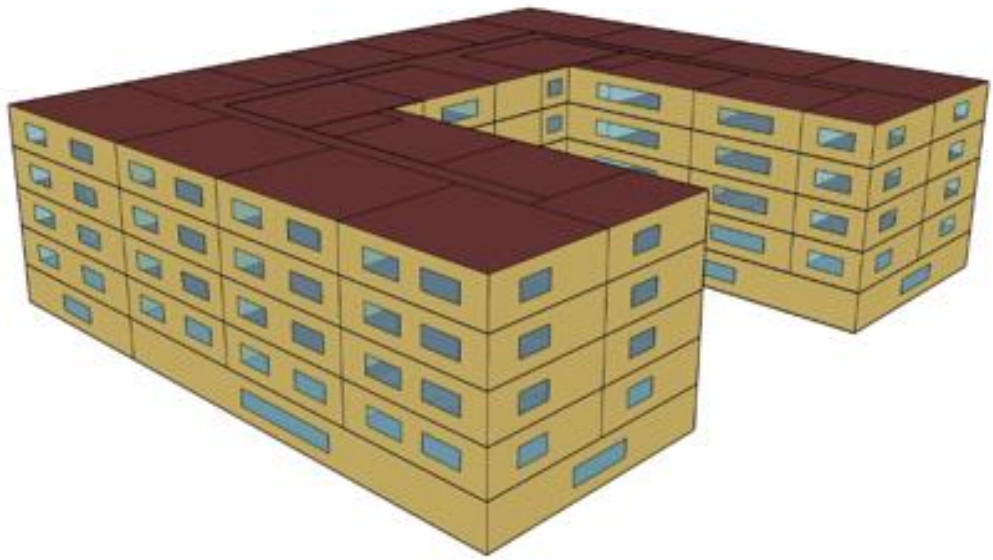

Source: TRC 2019

Figure 1: 5-story mid-rise multifamily prototype depiction.

The methodology used in the analyses for the prototypical building type begins with a design that meets the minimum 2019 Title 24 prescriptive requirements (zero compliance margin). Table 140.3-B and 140.3-C in the 2019 Title 24 (California Energy Commission, 2018a) lists the prescriptive measures that determine the baseline design in each climate zone for the nonresidential and high-rise residential spaces, respectively. Other features are consistent with the Standard Design in the Nonresidential ACM Reference Manual (California Energy Commission, 2019a) with one exception. The apartments use split system heat pumps instead of a split furnace

and air conditioner that is prescribed in Table 2 of the Nonresidential ACM Reference Manual. This modeling choice was made to better reflect current market data, which shows heat pumps to be the most common system type and a very low prevalence of gas furnaces for multifamily buildings four stories and greater. This is based on a report completed by TRC (TRC, 2019) and validated by analysis of CA HERS Registry Data by SCE that showed 47% of low-rise multifamily new construction in the 2013 and 2016 code cycles had electric space heating. The analysis also assumed electric cooking in the apartment units to reflect current market data. Laundry was not addressed in this study. The building prototype assumes central laundry facilities and no laundry in the units.

2.2 Measure Analysis

EnergyPro 8.1, which uses the California Building Energy Code Compliance simulation tool, CBECC-Com 2019.1.2, as the simulation engine, was used to evaluate energy impacts using the 2019 Title 24 prescriptive standards as the benchmark, and the 2019 TDV values. CBECC-Com was used for this analysis to evaluate the mid-rise building for code compliance under the 2019 non-residential standards. TDV is the energy metric used by the Energy Commission since the 2005 Title 24 energy code to evaluate compliance with the Title 24 Standards.

Using the 2019 baseline as the starting point, prospective energy efficiency measures were identified and modeled to determine the projected site energy (Therm and kWh) and compliance impacts. Annual utility costs were calculated using hourly data output from CBECC-Com, and electricity and natural gas tariffs for each of the investor owned utilities (IOUs).

This analysis focused on the residential apartments only. A prior study and report demonstrated the cost-effectiveness of above code packages for nonresidential buildings (Statewide Reach Code Team, 2019a). The Statewide Reach Code Team selected measures for evaluation based on the residential and nonresidential 2019 reach code analysis ((Statewide Reach Code Team, 2019a), (Statewide Reach Code Team, 2019b)) as well as experience with and outreach to architects, builders, and engineers along with general knowledge of the relative acceptance of many measures. Efficiency measure packages found to be cost-effective in the nonresidential building reach code analysis were applied to the nonresidential spaces for evaluating performance relative to compliance, but the incremental costs and energy impacts of these measures on the nonresidential spaces were not included in this analysis. Refer to the nonresidential reach code study for more details (Statewide Reach Code Team, 2019a).

2.2.1 Federal Preemption

The Department of Energy (DOE) sets minimum efficiency standards for equipment and appliances that are federally regulated under the National Appliance Energy Conservation Act (NAECA), including heating, cooling, and water heating equipment. Since state and local governments are prohibited from adopting policies that mandate higher minimum efficiencies than the federal standards require, the focus of this study is to identify and evaluate cost-effective packages that do not include high efficiency equipment. While this study is limited by federal preemption, in practice builders may use any package of compliant measures to achieve the performance goals, including high efficiency appliances. Often, these measures are the simplest and most affordable measures to increase energy performance.

2.2.2 Energy Efficiency Measures

Following are descriptions of each of the efficiency measures evaluated for the residential spaces under this analysis. Because not all of the measures described below were found to be cost-effective, and cost-effectiveness varied by climate zone, not all measures are included in all packages and some of the measures listed are not included in any final package.

Improved Fenestration – Lower U-factor: Reduce window U-factor to 0.25 Btu/hr-ft^2-°F. The prescriptive maximum U-factor is 0.36 in all climates. This measure is applied to all windows on floors two through five.

Improved Fenestration – Lower SHGC: Reduce window solar heat gain coefficient (SHGC) to 0.22. The prescriptive maximum SHGC is 0.25 for fixed windows in all climates. The Statewide Reach Code Team evaluated increased SHGC in heating dominated climates (Climate Zone 1, 3, 5, and 16) but results were better with a lower SHGC. This measure is applied to all windows on floors two through five.

Exterior Wall Insulation: Add one inch of R-4 exterior continuous insulation. To meet the prescriptive wall requirements, it's assumed that exterior wall insulation is used in the basecase, therefore this measure adds additional R-value to existing exterior insulation. This measure is applied to all walls on floors two through five.

HERS Verification of Hot Water Pipe Insulation: The California Plumbing Code (CPC) requires pipe insulation on all hot water lines. This measure provides credit for HERS Rater verification of pipe insulation requirements according to the procedures outlined in the 2019 Reference Appendices RA3.6.3. (California Energy Commission, 2018b).

Low Pressure Drop Ducts: Upgrade the duct distribution system to reduce external static pressure and meet a maximum fan efficacy of 0.25 watts per cfm operating at full speed. This may involve upsizing ductwork, reducing the total effective length of ducts, and/or selecting low pressure drop components, such as filters. This measure is applied to the ducted split heat pumps serving the apartments.

Solar Thermal: Prescriptively, central water heating systems require a solar thermal system with a 20% solar fraction in Climates Zones 1 through 9 and 35% solar fraction in Climate Zones 10 through 16. This measure upgrades the prescriptive solar thermal system to meet a 50% solar fraction in all climates, assuming there is available roof space for the additional collectors.

Drain Water Heat Recovery: Add drain water heat recovery with a 50% effectiveness to serve all the apartments. The assumption is for an unequal flow design where the output of the heat exchanger feeds only the cold water inlets to the apartment showers, not the water heater cold water makeup.

Efficiency measures were applied to the nonresidential spaces based on the 2019 Nonresidential Reach Code Cost-Effectiveness Study (Statewide Reach Code Team, 2019a).

2.2.3 All Electric Measures

This analysis assumes that the basecase prototype model uses individual heat pumps for space heating and all electric appliances in the apartments. Therefore, the domestic hot water system is the only equipment serving the apartment spaces to electrify in the all-electric design . The Statewide Reach Code Team evaluated two configurations for electric heat pump water heaters (HPWHs) described below.

Clustered Heat Pump Water Heater: This clustered design uses residential integrated storage HPWHs to serve more than one apartment; 4 to 5 bedrooms on average for a total of 32 HPWHs in the 88-unit building. The water heaters are located in interior closets throughout the building and designed for short plumbing runs without using a hot water recirculation loop. A minimum efficiency 2.0 UEF HPWH was used for this analysis (to avoid federal preemption). This approach has been selectively used in multifamily projects because of its reliance on lower cost small capacity HPWH products. Since it uses residential equipment with each HPWH serving fewer than 8 apartments the CBECC-Com compliance software had the capability to evaluate this design strategy, even before central HPWH recirculation options were incorporated into the software. The clustered strategy is not a prescriptive option but is allowed in the performance path if the water heater serves no more than 8 units and has no recirculation control. The standard design assumes solar thermal, so the proposed design is penalized in compliance for no solar thermal and made up with other efficiency measures.

Prescriptive Central Heat Pump Water Heater: Per Section 150.1(c)8C of the 2019 Standards, the Energy Commission made an executive determination outlining requirements of a prescriptive approach for central heat pump water heating systems in December 2019 (California Energy Commission, 2019b). Key aspects of the prescriptive approach are described below:

- The system must be configured with a design similar to what is presented in the schematic in Figure 2 of the executive determination document.
- HPWH must be single-pass split system with the compressor located outdoors and be able to operate down to -20°F. In CBECC-Com 2019.1.2, the current version at the time of writing this report, the software only has the capability of modeling Sanden HPWHs.
- The system must include either a solar thermal water heating system that meets the current prescriptive requirements or 0.1 kW_{DC} of photovoltaic system capacity per apartment/dwelling unit.

For this configuration the Statewide Reach Code Team evaluated costs for a central HPWH system using Sanden compressors that met these prescriptive requirements. Based on the system sizing requirements, 15 Sanden units and 1,200 gallons of primary storage capacity are required for the 88-unit building. At the time that cost-effectiveness was initially compared for the two HPWH configurations, the latest CBECC-Com software with the ability to model central HPWH systems was not yet available. To estimate the energy use for the central configuration, the water heating energy use for the clustered configuration was used. It is expected that the energy use of the central system will be higher than the clustered approach primarily as a result of recirculation pump energy and losses.

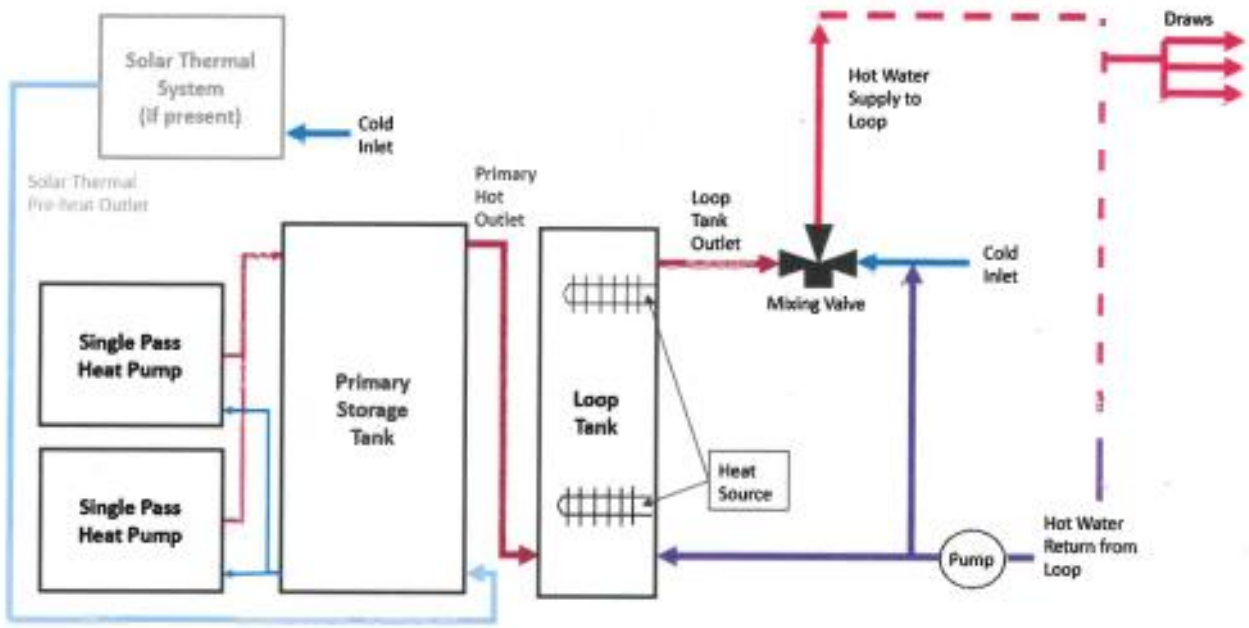

Figure 2: Prescriptive central heat pump water heater system schematic.

All-electric measures were applied to the nonresidential spaces based on the 2019 Nonresidential Reach Code Cost-Effectiveness Study (Statewide Reach Code Team, 2019a).

2.2.4 Renewable Energy

Solar Photovoltaic (PV): There is no existing requirement for PV in the 2019 Title 24 nonresidential code for high-rise residential buildings (four or more stories). The PV sizing methodology was developed to offset a portion of annual residential electricity use and avoid oversizing which would violate net energy metering (NEM)

rules. In all cases, PV is evaluated using the PV simulations within CBECC-Com using a Standard module type, 180 degree azimuth, and 22 degree .tilt. The analysis evaluated PV system capacities equal to 0.1, 0.2, 0.3, and 1 kW_{DC} per apartment. The PV system offsets approximately XX4%, XX8%, XX13%, and 42%, of the apartment electricity usage, respectively. Assuming 15 Watts per square foot for a typical commercial PV system, 1 kW_{DC} per apartment, or 88 kW_{DC} total, would take up about 25% of the total roof area.

2.3 Package Development

Four packages were evaluated for each climate zone, as described below.

1) **Efficiency – Mixed-fuel**: This package applies efficiency measures that don't trigger federal preemption including envelope, water heating distribution, and duct distribution efficiency measures.
2) **Efficiency – All Electric**: This package applies efficiency measures that don't trigger federal preemption in addition to converting any natural gas appliances to electric appliances. For the residential spaces, only water heating is converted from natural gas to electric.
3) **Efficiency & PV – Mixed-fuel**: Beginning with the Efficiency Package , PV was added to offset a portion of the apartment estimated electricity use.
4) **Efficiency & PV – All Electric**: Beginning with the Efficiency Package, PV was added to offset a portion of the apartment estimated electricity use.

2.4 Incremental Costs

2.4.1 Energy Efficiency Measure Costs

Table 22 summarizes the incremental cost assumptions for measures evaluated in this study relative to the residential parts of the building. Incremental costs represent the equipment, installation, replacement, and maintenance costs of the proposed measures relative to the base case. Replacement costs are applied to PV inverters and battery systems over the 30-year evaluation period. There is no assumed maintenance on the envelope, HVAC, or DHW measures. Costs were estimated to reflect costs to the building owner. When costs were obtained from a source that did not already include builder overhead and profit, a markup of 10% was added. All costs are provided as present value in 2020 (2020 PV$). Costs due to variations in furnace, air conditioner, and heat pump capacity by climate zone were not accounted for in the analysis.

Table 2: Incremental Cost Assumptions

Measure	Performance Level	Incremental Cost (2020 PV$)	Source & Notes
Non-Preempted Measures			
Window U-factor	0.25 vs 0.36	$28,301	$6.95/ft^2 window area based on analysis conducted for the 2019 and 2022 Title 24 code cycles (Statewide CASE Team, 2018).
Window SHGC	0.22 vs 0.25	$0	Data from CASE Report along with direct feedback from Statewide CASE Team that higher SHGC does not necessarily have any incremental cost impact (Statewide CASE Team, 2017b).
Exterior Wall Insulation	Add 1-inch	$14,058	$0.86/ft^2 based on adding 1" of exterior insulation on a wall with some level of existing exterior insulation. Costs are averaged from two sources ((Statewide CASE Team, 2014), (Statewide CASE Team, 2017a)) and for expanded polystyrene (EPS) and polyisocyanurate products with a 10% mark-up added to account for cost increases over time.
HERS Verified Pipe Insulation	HERS verified pipe insulation vs no verification	$7,260	$83 per apartment for a HERS Rater to conduct verification of pipe insulation based on feedback from HERS Raters.
Low Pressure Drop Ducts	0.25 W/cfm vs 0.35 W/cfm	$12,654	$144 per apartment. Costs assume 1.5 hourshrs labor per multifamily apartment. Labor rate of $96 per hour is from 2019 RSMeans for sheet metal workers and includes an average City Cost Index for labor for California cities.
Solar Thermal	50% solar fraction vs prescriptive 20%-35%	$79,560	Costs based on 2022 multifamily solar thermal measure CASE proposal (Statewide CASE Team, 2020) and include first cost of $70,727 and $8,834 present value for replacement/maintenance costs.
Drain Water Heat Recovery	50% effectiveness, flows to shower	$16,984	Costs from 2019 DWHR CASE Report which assumes 1 heat exchanger per 4 units (Statewide CASE Team, 2017c). Costs do not include additional cost of water meters at each apartment (per SB7), which would add approx. $175 per dwelling unit.
Renewable Energy (PV)			
PV System	System size varies	$3.17/$W_{DC}$	First costs are from LBNL's Tracking the Sun 2018 costs (Barbose et al., 2018) and represent costs for the first half of 2018 of $2.90/$W_{DC}$ for nonresidential systems ≤500 kW_{DC}. These costs were reduced by 16% for the solar investment tax credit, which is the average credit over years 2020-2022. Inverter replacement cost of $0.14/$W_{DC}$ present value includes replacements at year 11 at $0.15/$W_{DC}$ (nominal) and at year 21 at $0.12/$W_{DC}$ (nominal) per the 2019 PV CASE Report (California Energy Commission, 2017). System maintenance costs of $0.31/$W_{DC}$ present value assumes additional $0.02/$W_{DC}$ (nominal) annually per the 2019 PV CASE Report (California Energy Commission, 2017). 10% overhead and profit added to all costs.

2.4.2 All Electric Measure Costs

The Statewide Reach Code Team reached out to stakeholders to collect project cost information for central gas boilers and both clustered and central HPWH designs. Project data sources included Association for Energy Affordability (AEA), Redwood Energy, Mithun, Ecotope, and the All-Electric Multifamily Compliance Pathway 2022 Draft CASE Report (Statewide CASE Team, 2020). Costs are presented in Table 3.

Table 3: Costs for Gas versus Electric Water Heating Equipment over 30-Year Period of Analysis

	Central Gas Boiler (CZs 1-9)	Central Gas Boiler (CZs 10-16)	Clustered HPWH	Central HPWH
System Quantity/Description	1 boiler recirc		32 units 80 gal. each no recirc	15 units .1,200-gal total recirc
Total Equipment Cost	$98,733		$126,778	$213,364
Solar Thermal	(20% SF) 110,096	(35% SF) $131,817	-	-
Solar PV	-	-	-	$23,580 (8.8 kW_{DC})
Total First Cost	$202,920	$224,641	$126,778	$236,944
Maintenance/Replacement Cost (NPV)	$69,283	$69,283	$81,374	$120,683
Total Cost (NPV)	$272,203	$293,924	$208,152	$357,627
Incremental Cost CZ 1-9 (NPV)			($64,051)	$85,424
Incremental Cost CZ 10-16 (NPV)			($85,772)	$63,703

Typical costs for the water heating systems are based on the following assumptions:

Central Gas Boiler: Based on the average of total estimated project costs from contractors for four multi-family projects ranging from 32 to 340 apartments and cost estimates for mid-rise and high-rise buildings from the All-Electric Multifamily Compliance Pathway 2022 Draft CASE Report (Statewide CASE Team, 2020). The cost per dwelling unit ranged from $547 to $2,089 and the average cost applied in this analysis was $1,122 per dwelling unit. Costs include installation of gas piping from the building meter to the water heater. Water heater lifetime is assumed to be 15 years and the net present value replacement cost at year 15 is $63,373.

Clustered HPWH: Based on costs from one project with RHEEM HPWHs used in a clustered design. Costs include water heater interior closet, electrical outlets, and increased breaker size and sub feed. Water heater based on 2.0 UEF 80-gallon appliance with 32 total HPWHs serving the building (1 per 4 to 5 bedrooms). Water heater lifetime is assumed to be 15 years and the net present value replacement cost at year 15 is $81,374. This design assumes 8 water heater closets per floor, at approximately 15 square feet per closet. While this has an impact on leasable floor area, the design impacts have been found to be minimal when addressed early in design.

Central HPWH: Based on average total installed project costs from four multi-family projects with Sanden HPWHs ranging from 4 to 16 Sanden units per project. The cost per Sanden HPWH ranged from $13,094 to $15,766 and the average cost applied in this analysis was $14,224 per HPWH. Based on the prescriptive system sizing requirements, 15 Sanden units are required for the 88-unit building, resulting in a total first cost of $213,364. Water heater lifetime is assumed to be 15 years. Because Sanden HPWHS are an emerging technology in the United States, it is expected that over time their costs will decrease and for replacement at year 15 the costs are assumed to have decreased by 15%.

Solar Thermal: Based on system costs provided in the All-Electric Multifamily Compliance Pathway 2022 Draft CASE Report (Statewide CASE Team, 2020). First costs reflect the material, labor, and markup costs presented in the Draft CASE Report for the mid-rise prototype. Replacement and maintenance costs assume replacement of the solar thermal tank at year 15 at $6,110 and glycol replacement of $1,300 each time at years 9, 18, and 27. The cost of the remaining useful life of the glycol at year 30 is deducted from the final cost. The Draft CASE Report included costs for replacing the solar collectors at year 20. Collectors can have longer lifetimes up to 30 years if well maintained, therefore this analysis does not assume any replacement of the collectors over the 30 year analysis period.

Table 4: Solar Thermal Detailed Costs over 30-Year Period of Analysis

Solar Fraction	20%	35%
Materials	$33,975	$48,975
Labor	$47,740	$49,776
Markup	27.5%	27.5%
First Cost	$104,187	$125,908
Replacement/Maintenance (PV)	$5,910	$5,910
Total PV Cost	**$110,096**	**$131,817**

2.4.3 Natural Gas Infrastructure Costs

This analysis assumes that in an all-electric new construction project, natural gas would not be supplied to the building. Eliminating natural gas to the building would save costs associated with connecting a service line from the street main to the building, piping distribution within the building, and monthly meter connection charges from the utility. Incremental costs for natural gas infrastructure in the mixed-fuel building are presented in Table 5. Cost data for the plan review and service extension was estimated on a per building basis and then apportioned to the residential and nonresidential portions of the buildings based on annual gas consumption. For the basecase prototype building 49% to 93% of estimated building annual gas use is attributed to the residential water heating system across all climate zones. A statewide average of 80% was calculated and applied to the costs in Table 5 based on housing starts provided by the California Energy Commission for the 2019 Title 24 code development process. The meter costs were based on the service provided to the residential and nonresidential portion of the building separately. Following the table are descriptions of assumptions for each of the cost components. Costs for gas piping from the meter to the gas boilers are included in the central gas boiler costs above. Gas piping distribution costs were typically included in total project costs and could not be broken out in all cases.

Table 5: Natural Gas Infrastructure Cost Savings for All-Electric Building

Item	Total	NonResidential Portion	Residential Portion
Natural Gas Plan Review	$2,316	$452	$1,864
Service Extension[1]	$4,600	$898	$3,702
Meter	$7,200	$3,600	$3,600
Total First Cost	***$14,116***	***$4,950***	***$9,166***

[1]Service extension costs include 50% reduction assuming portion of the costs are passed on to gas customers.

Natural Gas Plan Review: Total costs are based on TRC's 2019 reach code analysis for Palo Alto (TRC, 2019) and then split between the residential and nonresidential spaces in the building proportionately according to annual gas consumption with 80% of the annual load is attributed to residential units on a statewide basis.

Service Extension: Service extension costs to the building were taken from PG&E memo dated December 5, 2019, to Energy Commission staff, include costs for trenching, and assume non-residential new construction within a developed area (see Appendix C – PG&E Gas Infrastructure Cost Memo, PG&E, 2019). The total cost of

$9,200 from the memo is reduced by 50% to account for the portion of the costs paid for by all customers due to application of Utility Gas Main Extensions rules[1]. The resultant cost is apportioned between the residential and nonresidential spaces in the building based on annual gas consumption of residential and nonresidential uses, with 80% of the annual load natural gas use attributed to residential units on a statewide basis.

Meter: Cost per meter provided by PG&E for commercial meters. Assume one meter for nonresidential boilers serving space heating and service water heating, and another for residential boilers serving domestic hot water.

2.5 Cost-effectiveness

Cost-effectiveness was evaluated for all 16 California climate zones and is presented based on both TDV energy, using the Energy Commission's LCC methodology, and an On-Bill approach using residential customer utility rates. Both methodologies require estimating and quantifying the value of the energy impact associated with energy efficiency measures over the life of the measures (30 years) as compared to the prescriptive Title 24 requirements.

Cost-effectiveness is presented using both lifecycle net present value (NPV) savings and benefit-to-cost (B/C) ratio metrics, which represent the cost-effectiveness of a measure over a 30-year lifetime taking into account discounting of future savings and costs.

- **Net Present Value (NPV) Savings:** NPV benefits minus NPV costs is reported as a cost effectiveness metric. If the net savings of a measure or package is positive, it is considered cost effective. Negative savings represent net costs. A measure that has negative energy cost benefits (energy cost increase) can still be cost effective if the costs to implement the measure are more negative (i.e., material and maintenance cost savings).
- **Benefit-to-Cost (B/C) Ratio:** Ratio of the present value of all benefits to the present value of all costs over 30 years (NPV benefits divided by NPV costs). The criteria for cost effectiveness is a B/C greater than 1.0. A value of one indicates the NPV of the savings over the life of the measure is equivalent to the NPV of the lifetime incremental cost of that measure. A value greater than one represents a positive return on investment. The B/C ratio is calculated according to Equation 1.

Equation 1

$$Benefit - to - Cost\ Ratio = \frac{NPV\ of\ lifetime\ benefit}{NPV\ of\ lifetime\ cost}$$

Improving the efficiency of a project often requires an initial incremental investment. In most cases the benefit is represented by annual "On-Bill" utility or TDV savings, and the cost by incremental first cost and replacement costs. However, some packages result in initial construction cost savings (negative incremental cost), and either energy cost savings (positive benefits), or increased energy costs (negative benefits). In cases where both construction costs and energy-related savings are negative, the construction cost savings are treated as the 'benefit' while the increased energy costs are the 'cost.' In cases where a measure or package is cost-effective immediately (i.e. upfront construction cost savings and lifetime energy cost savings), B/C ratio cost-effectiveness is represented by ">1". Because of these situations, NPV savings are also reported, which, in these cases, are positive values.

---

[1] PG&E Rule 15: https://www.pge.com/tariffs/tm2/pdf/GAS_RULES_15.pdf

SoCalGas Rule 20: https://www.socalgas.com/regulatory/tariffs/tm2/pdf/20.pdf

SDG&E Rule 15: http://regarchive.sdge.com/tm2/pdf/GAS_GAS-RULES_GRULE15.pdf

The lifetime costs or benefits are calculated according to Equation 2.

Equation 2

$$\boldsymbol{PV\ of\ lifetime\ cost/benefit = \sum_{t=1}^{n} Annual\ cost/benefit_t * (1+r)^t}$$

Where:

- *n* = analysis term
- *r* = real discount rate
- *t* = year at which cost/benefit is incurred

The following summarizes the assumptions applied in this analysis to both methodologies.

- Analysis term of 30 years
- Real discount rate of 3% (does not include inflation)

2.5.1 On-Bill Customer Lifecycle Cost

Residential utility rates were used to calculate utility costs for all cases and determine On-Bill customer cost-effectiveness for the proposed packages. Utility costs of the nonresidential spaces were not evaluated in this study, only apartment and water heating energy use. The Statewide Reach Code Team obtained the recommended utility rates from each IOU based on the assumption that the reach codes go into effect in 2020. Annual utility costs were calculated using hourly electricity and gas output from CBECC-Com, and applying the utility tariffs summarized in Table 6. Appendix B – Utility Tariff Details includes details on the utility rate schedules used for this study. The applicable residential time-of-use (TOU) rate was applied to all cases. For cases with PV generation, the approved NEM2 tariffs were applied along with minimum daily use billing and mandatory non-bypassable charges. For the PV cases annual electric production was always less than annual electricity consumption; and therefore, no credits for surplus generation were necessary. Future changes to the NEM tariffs are likely; however, there is a lot of uncertainty about what those changes will be and if they will become effective during the 2019 Title 24 code cycle (2020-2022).

Based on guidance from the IOUs, the residential electric TOU tariffs that apply to individually metered residential apartments were also used to calculate electricity costs for the central water heating systems. Where baseline allowances are included in the tariffs (SCE TOU-D and SDG&E TOU-DR1) the allowances were applied on a per unit basis for all-electric service.

Based on guidance from the IOUs, master metered multifamily service gas tariffs were used to calculate gas costs for the central water heating systems. The baseline quantities were applied on a per unit basis, as is defined in the schedules, and when available water heating only baseline values were used.

Utility rates were applied to each climate zone based on the predominant IOU serving the population of each zone according to Table 6. Climate Zones 10 and 14 are evaluated with both SCE/SoCalGas and SDG&E tariffs since each utility has customers within these climate zones. Climate Zone 5 is evaluated under both PG&E and SoCalGas natural gas rates. Two municipal utility rates were also evaluated, Sacramento Municipal Utility District (SMUD) in Climate Zone 12 and City of Palo Alto Utilities (CPAU) in Climate Zone 4.

Table 6: IOU Utility Tariffs Applied Based on Climate Zone

Climate Zones	Electric/Gas Utility	Electricity (Apartment Use)	Electricity (Central Water Heating)	Natural Gas (Central Water Heating)[1]
1-5, 11-13, 16	PG&E	E-TOU-C	E-TOU-C	PG&E GM
5	PG&E/SoCalGas			SoCalGas GM-E
6, 8-10, 14,15	SCE/SoCalGas	TOU-D (Option 4-9)	TOU-D (Option 4-9)	
7, 10, 14	SDG&E	TOU-DR1	TOU-DR1	SDG&E GM
12	SMUD/PG&E	R-TOD (RT02)	GSN-T	PG&E GM
4	CPAU	E-1	E-2	G-2

[1] These rates are allowed assuming no gas is used in the apartments.

Utility rates are assumed to escalate over time, using assumptions from research conducted by Energy and Environmental Economics (E3) in the 2019 study Residential Building Electrification in California (Energy & Environmental Economics, 2019). Escalation of natural gas rates between 2019 and 2022 is based on the currently filed General Rate Cases (GRCs) for PG&E, SoCalGas and SDG&E. From 2023 through 2025, gas rates are assumed to escalate at 4% per year above inflation, which reflects historical rate increases between 2013 and 2018. Escalation of electricity rates from 2019 through 2025 is assumed to be 2% per year above inflation, based on electric utility estimates. After 2025, escalation rates for both natural gas and electric rates are assumed to drop to a more conservative 1% escalation per year above inflation for long-term rate trajectories beginning in 2026 through 2050. See Appendix B – Utility Tariff Details for additional details.

2.5.2 TDV Lifecycle Cost

Cost-effectiveness was also assessed using the Energy Commission's TDV LCC methodology. TDV is a normalized monetary format developed and used by the Energy Commission for comparing electricity and natural gas savings, and it considers the cost of electricity and natural gas consumed during different times of the day and year. The 2019 TDV values are based on long term discounted costs of 30 years for all residential measures. The CBECC-Com simulation software results are expressed in terms of TDV kBtus. The present value of the energy cost savings in dollars is calculated by multiplying the TDV kBtu savings by a net present value (NPV) factor, also developed by the Energy Commission. The 30-year NPV factor is $0.154/TDV kBtu for nonresidential projects under 2019 Title 24.

Like the customer B/C ratio, a TDV B/C ratio value of one indicates the savings over the life of the measure are equivalent to the incremental cost of that measure. A value greater than one represents a positive return on investment. The ratio is calculated according to Equation 3.

Equation 3

$$TDV\ Benefit - to - Cost\ Ratio = \frac{TDV\ energy\ savings\ *\ NPV\ factor}{NPV\ of\ lifetime\ incremental\ cost}$$

2.6 Greenhouse Gas Emissions

Equivalent CO2 emission savings were calculated based on estimates from Zero Code reports available in CBECC-Com simulation software.[2] Electricity emissions vary by region and by hour of the year, accounting for time dependent energy use and carbon emissions based on source emissions, including renewable portfolio standard

[2] More information at: : https://zero-code.org/wp-content/uploads/2018/11/ZERO-Code-TSD-California.pdf

projections. Two distinct hourly profiles, one for Climate Zones 1 through 5 and 11 through 13 and another for Climate Zones 6 through 10 and 14 through 16. For natural gas a fixed factor of 0.005307 metric tons/therm is used. To compare the mixed fuel and all-electric cases side-by-side, greenhouse gas (GHG) emissions are presented as CO2-equivalent emissions per dwelling unit.

3 Results

The primary objective of the evaluation is to identify cost-effective, non-preempted performance targets for mid-rise multifamily buildings, under both mixed-fuel and all-electric cases, to support the design of local ordinances requiring new mid-rise residential buildings to exceed the minimum state requirements. The packages presented are representative examples of designs and measures that can be used to meet the requirements. In practice, a builder can use any combination of non-preempted or preempted compliant measures to meet the requirements.

This analysis evaluated a package of efficiency measures applied to a mixed-fuel design and a similar package for an all-electric design. Each design was evaluated using the predominant utility rates in all 16 California climate zones. Solar PV was also added to the efficiency packages and a sensitivity analysis was conducted at various PV system capacities to optimize cost-effectiveness.

Although some of the efficiency measures evaluated were not cost-effective and were eliminated, the following measures are included in at least one package:

- Improved fenestration
- Wall insulation
- Low pressure-drop distribution system
- HERS verified pipe insulation

The following measures were evaluated but were found to not be cost-effective and were not included in any of the packages.

- Solar thermal system with higher solar fraction than prescriptive requirements
- Drain water heat recovery

Cost-effectiveness results for the all-electric case are based upon the clustered HPWH approach only. Lower first costs with the clustered approach resulted in better cost-effectiveness than the central HPWH design.

3.1 Mid-Rise Multifamily Results

Table 7 and Table 9 present results for the mixed-fuel and all-electric packages, respectively. Each table shows cost-effectiveness results for **Efficiency Only** packages and **Efficiency + PV** packages (with a 17.6 kW_{DC} PV system sized based on 0.2 kW_{DC} per apartment). Both mixed-fuel and all-electric results are relative to the mixed-fuel 2019 Title 24 prescriptive baseline. B/C ratios for all packages are presented according to both the On-Bill and TDV methodologies for the mixed-fuel and the all-electric cases, respectively. Detailed results are presented in *Appendix D – Detailed Results Mixed-Fuel* and *Appendix E – Detailed Results All-Electric*.

Efficiency Only:

Compliance margins for the **Mixed-Fuel Efficiency Only** cases range from 5% to 8%, which meets the CALGreen Tier 1 energy performance requirement for high-rise residential buildings. **Mixed-Fuel Efficiency Only** cases are cost-effective based on TDV in all climate zones except for 1 and 16. The cases are cost-effective from an On-Bill perspective in all climate zones except 1.

The **All-Electric Efficiency Only** package does not meet minimum code requirements in Climate Zones 1 and 16. Compliance margins for all other climate zones range from 1% to 5%. **All-Electric Efficiency Only** cases are cost-

effective in all climate zones based on TDV. Cost-effectiveness from an On-Bill perspective is favorable in all climate zones except 1, 16, and 5 in SCG territory.

Efficiency + PV:

Several PV system size options were evaluated for the **Efficiency + PV** packages. Of the PV system sizes evaluated, 0.2 kW_{DC} per apartment represents the smallest system that resulted in B/C ratios greater than one based on both metrics in all climate zones for the mixed-fuel scenario. Adding a 0.1 kW_{DC} per apartment in the all-electric cases, resulted in B/C ratios greater than one in all climate zones.

Table 11 and Table 12 describe the efficiency measures included in the mixed-fuel and all-electric packages, respectively.

Table 7: Mixed-Fuel Package Results: Efficiency Only (SAVINGS/COST PER APARTMENT)

Climate Zone	Elec Utility	Gas Utility	Comp. Margin	Total Gas Savings (therms)	Total Electric Savings (kWh)	GHG Reductions (lb. CO2)	Savings (2020 PV$)		Incremental Cost (2020 PV$)	B/C Ratio[1]		NPV	
							Utility Cost Savings	TDV Savings		On-Bill	TDV	On-Bill	TDV
CZ01	PGE	PGE	5.8%	0	26	18	$133	$105	$304	0.44	0.35	($171)	($199)
CZ02	PGE	PGE	5.9%	0	47	29	$391	$285	$144	2.72	1.98	$248	$141
CZ03	PGE	PGE	6.7%	0	44	27	$345	$226	$144	2.40	1.57	$202	$82
CZ04	PGE	PGE	6.6%	0	61	37	$465	$331	$144	3.24	2.31	$321	$188
CZ04-2	CPAU	CPAU	6.6%	0	61	37	$248	$331	$144	1.73	2.31	$104	$188
CZ05	PGE	PGE	6.7%	0	42	24	$320	$206	$144	2.22	1.43	$176	$62
CZ05-2	PGE	SCG	6.7%	0	42	24	$320	$206	$144	2.22	1.43	$176	$62
CZ06	SCE	SCG	7.1%	0	74	42	$424	$351	$144	2.95	2.44	$280	$207
CZ07	SDGE	SDGE	7.6%	0	81	48	$593	$374	$144	4.13	2.60	$449	$230
CZ08	SCE	SCG	7.0%	0	84	50	$484	$420	$144	3.37	2.92	$341	$276
CZ09	SCE	SCG	6.5%	0	83	51	$468	$441	$144	3.26	3.06	$324	$297
CZ10	SCE	SCG	6.5%	0	82	50	$410	$427	$144	2.85	2.97	$266	$283
CZ10-2	SDGE	SDGE	6.5%	0	82	50	$599	$427	$144	4.16	2.97	$455	$283
CZ11	PGE	PGE	6.8%	0	104	70	$637	$635	$625	1.02	1.02	$11	$10
CZ12	PGE	PGE	6.8%	0	93	60	$572	$568	$304	1.88	1.87	$268	$265
CZ12-2	SMUD	PGE	6.8%	0	93	71	$319	$568	$304	1.05	1.87	$15	$265
CZ13	PGE	PGE	7.3%	0	132	89	$798	$779	$625	1.28	1.25	$173	$154
CZ14	SCE	SCG	6.0%	0	80	49	$407	$449	$304	1.34	1.48	$103	$145
CZ14-2	SDGE	SDGE	6.0%	0	80	49	$576	$449	$304	1.90	1.48	$273	$145
CZ15	SCE	SCG	6.8%	0	145	93	$719	$802	$625	1.15	1.28	$94	$177
CZ16	PGE	PGE	7.4%	0	117	76	$646	$563	$625	1.03	0.90	$21	($62)

[1] Values in red indicate B/C ratios less than 1.

Table 8: Mixed-Fuel Package Results: PV + Efficiency 0.2 kW_{DC} per Apartment (SAVINGS/COST PER APARTMENT)

Climate Zone	Elec Utility	Gas Utility	Comp. Margin	Total Gas Savings (therms)	Total Electric Savings (kWh)	GHG Reductions (lb. CO2)	Savings (2020 PV$)		Incremental Cost (2020 PV$)	B/C Ratio[1]		NPV	
							Utility Cost Savings	TDV Savings		On-Bill	TDV	On-Bill	TDV
CZ01	PGE	PGE	5.8%	0	291	131	$1,637	$1,090	$937	1.75	1.16	$701	$153
CZ02	PGE	PGE	5.9%	0	360	163	$2,431	$1,469	$777	3.13	1.89	$1,655	$692
CZ03	PGE	PGE	6.7%	0	359	161	$2,400	$1,397	$777	3.09	1.80	$1,624	$620
CZ04	PGE	PGE	6.6%	0	385	176	$2,579	$1,562	$777	3.32	2.01	$1,802	$785
CZ04-2	CPAU	CPAU	6.6%	0	61	176	$1,335	$1,562	$777	1.72	2.01	$558	$785
CZ05	PGE	PGE	6.7%	0	379	168	$2,480	$1,461	$777	3.19	1.88	$1,704	$685
CZ05-2	PGE	SCG	6.7%	0	379	168	$2,480	$1,461	$777	3.19	1.88	$1,704	$685
CZ06	SCE	SCG	7.1%	0	392	178	$1,987	$1,587	$777	2.56	2.04	$1,210	$810
CZ07	SDGE	SDGE	7.6%	0	411	189	$2,770	$1,647	$777	3.57	2.12	$1,993	$870
CZ08	SCE	SCG	7.0%	0	402	186	$2,059	$1,708	$777	2.65	2.20	$1,282	$931
CZ09	SCE	SCG	6.5%	0	410	192	$1,876	$1,742	$777	2.41	2.24	$1,099	$965
CZ10	SCE	SCG	6.5%	0	409	190	$1,797	$1,681	$777	2.31	2.16	$1,020	$904
CZ10-2	SDGE	SDGE	6.5%	0	409	190	$2,646	$1,681	$777	3.41	2.16	$1,869	$904
CZ11	PGE	PGE	6.8%	0	422	206	$2,438	$1,877	$1,258	1.94	1.49	$1,180	$619
CZ12	PGE	PGE	6.8%	0	406	193	$2,352	$1,794	$937	2.51	1.91	$1,415	$857
CZ12-2	SMUD	PGE	6.8%	0	406	193	$1,226	$1,794	$937	1.31	1.91	$289	$857
CZ13	PGE	PGE	7.3%	0	441	221	$2,548	$1,965	$1,258	2.03	1.56	$1,290	$707
CZ14	SCE	SCG	6.0%	0	439	201	$1,923	$1,901	$937	2.05	2.03	$987	$964
CZ14-2	SDGE	SDGE	6.0%	0	439	201	$2,819	$1,901	$937	3.01	2.03	$1,882	$964
CZ15	SCE	SCG	6.8%	0	478	234	$2,128	$2,110	$1,258	1.69	1.68	$870	$852
CZ16	PGE	PGE	7.4%	0	457	222	$2,567	$1,818	$1,258	2.04	1.44	$1,309	$560

[1] Values in red indicate B/C ratios less than 1.

Table 9: All-Electric Package Results: Efficiency Only (SAVINGS/COSTS PER APARTMENT)

Climate Zone	Elec Utility	Gas Utility	Comp. Margin	Total Gas Savings (therms)	Total Electric Savings (kWh)	GHG Reductions (lb. CO2)	Savings (2020 PV$)		Incremental Cost (2020 PV$)	B/C Ratio[1,2]		NPV	
							Utility Cost Savings	TDV Savings		On-Bill	TDV	On-Bill	TDV
CZ01	PGE	PGE	-0.4%	125	-873	1040	-$674	$199	-$446	0.7	>1	($228)	$645
CZ02	PGE	PGE	1.6%	114	-762	971	-$238	$528	-$606	2.5	>1	$368	$1,134
CZ03	PGE	PGE	1.1%	115	-767	975	-$287	$390	-$606	2.1	>1	$319	$996
CZ04	PGE	PGE	3.4%	111	-714	952	-$102	$625	-$606	6.0	>1	$504	$1,231
CZ04-2	CPAU	CPAU	3.4%	111	-714	952	$345	$625	-$606	>1	>1	$951	$1,231
CZ05	PGE	PGE	1.3%	117	-788	991	-$350	$391	-$606	1.7	>1	$255	$996
CZ05-2	PGE	SCG	1.3%	117	-788	991	-$827	$391	-$606	0.7	>1	($221)	$996
CZ06	SCE	SCG	3.7%	107	-670	933	$153	$612	-$606	>1	>1	$759	$1,218
CZ07	SDGE	SDGE	4.8%	106	-653	930	-$58	$665	-$606	10.4	>1	$547	$1,271
CZ08	SCE	SCG	3.9%	104	-633	912	$227	$693	-$606	>1	>1	$833	$1,298
CZ09	SCE	SCG	3.8%	104	-633	912	$212	$739	-$606	>1	>1	$817	$1,345
CZ10	SCE	SCG	1.8%	90	-626	743	-$214	$396	-$853	4.0	>1	$639	$1,249
CZ10-2	SDGE	SDGE	1.8%	90	-626	743	-$478	$396	-$853	1.8	>1	$375	$1,249
CZ11	PGE	PGE	2.0%	91	-619	769	-$241	$430	-$371	1.5	>1	$130	$802
CZ12	PGE	PGE	1.4%	94	-662	773	-$414	$288	-$693	1.7	>1	$279	$980
CZ12-2	SMUD	PGE	1.4%	94	-662	773	$1,060	$288	-$693	>1	>1	$1,753	$980
CZ13	PGE	PGE	2.6%	90	-579	777	-$62	$505	-$371	6.0	>1	$309	$876
CZ14	SCE	SCG	1.1%	92	-653	759	-$258	$305	-$693	2.7	>1	$435	$998
CZ14-2	SDGE	SDGE	1.1%	92	-653	759	-$532	$305	-$693	1.3	>1	$161	$998
CZ15	SCE	SCG	4.4%	74	-409	679	$332	$832	-$371	>1	>1	$704	$1,203
CZ16	PGE	PGE	-5.8%	108	-777	895	-$621	$127	-$371	0.6	>1	($250)	$498

[1] Values in red indicate B/C ratios less than 1.

[2] “>1” indicates cases where there are both incremental measure cost savings and energy cost savings.

Table 10: All-Electric Package Results: PV + Efficiency 0.1 kW_{DC} per Apartment (SAVINGS/COSTS PER APARTMENT)

Climate Zone	Elec Utility	Gas Utility	Comp. Margin	Total Gas Savings (therms)	Total Electric Savings (kWh)	GHG Reductions (lb. CO2)	Savings (2020 PV$)		Incremental Cost (2020 PV$)	B/C Ratio[1,2]		NPV	
							Utility Cost Savings	TDV Savings		On-Bill	TDV	On-Bill	TDV
CZ01	PGE	PGE	-0.4%	125	-741	1,097	$78	$692	-$129	>1	>1	$208	$821
CZ02	PGE	PGE	1.6%	114	-606	1,038	$782	$1,120	-$289	>1	>1	$1,071	$1,409
CZ03	PGE	PGE	1.1%	115	-609	1,042	$741	$975	-$289	>1	>1	$1,030	$1,264
CZ04	PGE	PGE	3.4%	111	-552	1,021	$955	$1,240	-$289	>1	>1	$1,244	$1,529
CZ04-2	CPAU	CPAU	3.4%	111	-714	1,021	$904	$1,240	-$289	>1	>1	$1,194	$1,529
CZ05	PGE	PGE	1.3%	117	-619	1,063	$730	$1,018	-$289	>1	>1	$1,019	$1,307
CZ05-2	PGE	SCG	1.3%	117	-619	1,063	$254	$1,018	-$289	>1	>1	$543	$1,307
CZ06	SCE	SCG	3.7%	107	-512	1,001	$935	$1,231	-$289	>1	>1	$1,224	$1,520
CZ07	SDGE	SDGE	4.8%	106	-488	1,000	$1,049	$1,302	-$289	>1	>1	$1,339	$1,591
CZ08	SCE	SCG	3.9%	104	-474	981	$1,014	$1,337	-$289	>1	>1	$1,304	$1,626
CZ09	SCE	SCG	3.8%	104	-469	983	$924	$1,390	-$289	>1	>1	$1,213	$1,679
CZ10	SCE	SCG	1.8%	90	-463	813	$480	$1,023	-$536	>1	>1	$1,016	$1,559
CZ10-2	SDGE	SDGE	1.8%	90	-463	813	$546	$1,023	-$536	>1	>1	$1,082	$1,559
CZ11	PGE	PGE	2.0%	91	-460	837	$660	$1,052	-$55	>1	>1	$714	$1,106
CZ12	PGE	PGE	1.4%	94	-505	839	$476	$900	-$376	>1	>1	$852	$1,276
CZ12-2	SMUD	PGE	1.4%	94	-505	839	$1,513	$900	-$376	>1	>1	$1,890	$1,276
CZ13	PGE	PGE	2.6%	90	-424	843	$813	$1,098	-$55	>1	>1	$867	$1,153
CZ14	SCE	SCG	1.1%	92	-473	835	$500	$1,031	-$376	>1	>1	$877	$1,407
CZ14-2	SDGE	SDGE	1.1%	92	-473	835	$589	$1,031	-$376	>1	>1	$965	$1,407
CZ15	SCE	SCG	4.4%	74	-242	750	$1,037	$1,485	-$55	>1	>1	$1,091	$1,540
CZ16	PGE	PGE	-5.8%	108	-608	969	$339	$754	-$55	>1	>1	$394	$809

[1] Values in red indicate B/C ratios less than 1.

[2] ">1" indicates cases where there are both incremental measure cost savings and energy cost savings.

Table 11: Mixed-Fuel Measure Package Summary

Climate Zone	Compliance Margin	MEASURE SPECIFICATION Window U-value	Window SHGC	Add Wall Ins.	Fan Watt Draw	HERS Pipe Ins.
CZ01	5.8%			+ 1"	0.25 W/cfm	No
CZ02	5.9%		0.22		0.25 W/cfm	No
CZ03	6.7%		0.22		0.25 W/cfm	No
CZ04	6.6%		0.22		0.25 W/cfm	No
CZ05	6.7%		0.22		0.25 W/cfm	No
CZ06	7.1%		0.22		0.25 W/cfm	No
CZ07	7.6%		0.22		0.25 W/cfm	No
CZ08	7.0%		0.22		0.25 W/cfm	No
CZ09	6.5%		0.22		0.25 W/cfm	No
CZ10	6.5%		0.22		0.25 W/cfm	No
CZ11	6.8%	0.25	0.22	+ 1"	0.25 W/cfm	No
CZ12	7.3%		0.22	+ 1"	0.25 W/cfm	No
CZ13	7.3%	0.25	0.22	+ 1"	0.25 W/cfm	No
CZ14	6.8%		0.22	+ 1"	0.25 W/cfm	No
CZ15	6.8%	0.25	0.22	+ 1"	0.25 W/cfm	No
CZ16	7.4%	0.25	0.22	+ 1"	0.25 W/cfm	No

Table 12: All-Electric Measure Package Summary

Climate Zone	Compliance Margin	MEASURE SPECIFICATION Window U-value	Window SHGC	Add Wall Ins.	Fan Watt Draw	HERS Pipe Ins.
CZ01	-0.4%			+ 1"	0.25 W/cfm	Yes
CZ02	1.6%		0.22		0.25 W/cfm	Yes
CZ03	1.1%		0.22		0.25 W/cfm	Yes
CZ04	3.4%		0.22		0.25 W/cfm	Yes
CZ05	1.3%		0.22		0.25 W/cfm	Yes
CZ06	3.7%		0.22		0.25 W/cfm	Yes
CZ07	4.8%		0.22		0.25 W/cfm	Yes
CZ08	3.9%		0.22		0.25 W/cfm	Yes
CZ09	3.8%		0.22		0.25 W/cfm	Yes
CZ10	1.8%		0.22		0.25 W/cfm	Yes
CZ11	2.0%	0.25	0.22	+ 1"	0.25 W/cfm	Yes
CZ12	2.0%		0.22	+ 1"	0.25 W/cfm	Yes
CZ13	2.6%	0.25	0.22	+ 1"	0.25 W/cfm	Yes
CZ14	2.0%		0.22	+ 1"	0.25 W/cfm	Yes
CZ15	4.4%	0.25	0.22	+ 1"	0.25 W/cfm	Yes
CZ16	-5.8%	0.25	0.22	+ 1"	0.25 W/cfm	Yes

4 Conclusions & Summary

This report evaluated the feasibility and cost-effectiveness of "above code" performance specifications for newly constructed mid-rise multifamily buildings. The analysis included application of efficiency measures, electric appliances, and PV in all 16 California climate zones, and found cost-effective packages across the state. For the building designs and climate zones where cost-effective packages were identified, the results of this analysis can be used by local jurisdictions to support the adoption of reach codes. Cost-effectiveness was evaluated according to two metrics: On-Bill customer lifecycle benefit-to-cost ratio and TDV lifecycle benefit-to-cost ratio.

For mixed-fuel buildings, this analysis demonstrates that there are cost-effective **Efficiency Only** packages that achieve a minimum 5% compliance margin in most climate zones. The exception is Climate Zone 1 where the package was not cost-effective based on either the TDV or the On-Bill methodology. In all other cases the package is cost-effective for at least one of the metrics.

When 0.1 kW_{DC} per apartment is included, all climate zones are cost-effective based on at least one of the metrics. The addition of 0.1 kW_{DC} per apartment, or 8.8 kW_{DC} total for the building, results in an incremental cost for the PV system of $27,855. When 0.2 kW_{DC} per apartment is included, all climate zones are cost-effective based on both metrics. The addition of 0.2 kW_{DC} per apartment, or 17.6 kW_{DC} for the building, results in an incremental cost for the PV system of $55,711.

This study evaluated electrification of residential loads in new mid-rise multifamily buildings. Based on typical construction across California, the basecase condition incorporated all electric appliances within the apartment spaces. As a result, only central water heating was converted from natural gas to electric as part of this analysis. For all-electric buildings, this analysis demonstrates that there are cost-effective **All-Electric Efficiency Only** packages that meet minimum Title 24 code compliance in all climate zones except 1 and 16. The package is cost-effective based on the TDV methodology in all climate zones. It is cost-effective based on the On-Bill methodology in Climate Zones 2 through 15, except for Climate Zones 5 in SCG territory.

When 0.1 kW_{DC} per apartment is included, all climate zones are cost-effective based on both metrics. The addition of 0.1 kW_{DC} per apartment, or 8.8 kW_{DC} for the building, results in an incremental cost for the PV system of $27,855.

Additional considerations

- This study found that electrification of central domestic hot water loads, in combination with efficiency measures, can result in a benefit to the consumer through lower utility bills under certain electricity and gas tariff scenarios (Climate Zones 6, 8, 9, 15, 4 in CPAU territory, and 12 in SMUD territory territory). The all-electric results demonstrate a trend with On-Bill cost-effectiveness across the different electric utilities. Net Present Value in SCE and SDG&E territories, as well as SMUD and CPAU territories, are typically higher than the cases in PG&E territory. This indicates that rate design can play an important role in encouraging or discouraging electrification.
- This study did not evaluate federally preempted high efficiency appliances. Specifying high efficiency equipment is a viable approach to meeting Title 24 code compliance and local ordinance requirements and is commonly used by project teams. Other studies have found that efficiency packages and electrification packages that employ high efficiency equipment can be quite cost-effective ((Statewide Reach Code Team, 2019b), (Energy & Environmental Economics. 2019)).
- If PV capacity is added to both the mixed-fuel and all-electric efficiency packages, all cases are cost-effective based on at least one of the two evaluated metrics. In some cases, cost-effectiveness improves, and in other cases it decreases relative to the case with efficiency and/or electrification measures only. The cost-effectiveness of adding PV up to 1 kW per apartment, as an independent measure, results in On-Bill benefit-to-cost ratios between 2.3 and 3.1 for PGE territory, 2.1 to 2.3 for SCE territory, and 3.2 to 3.5 for SDG&E territory. The TDV B/C ratio for PV alone is approximately 2.0 for most climate zones

for all service territories. Adding PV in addition to the efficiency packages improves cost-effectiveness where the B/C ratios for the efficiency measures alone are lower than the B/C ratios for PV alone, and vice versa where they are higher. Annual basecase electricity costs and annual utility savings from PV are lower in SCE territory than in PG&E and SDG&E territories. This is due to lower off-peak cost and a bigger difference in peak versus off-peak rate for the TOU-D SCE electricity rate tariff. Most PV production occurs during off-peak times (4 pm to 9 pm peak period).

Table 13 summarizes compliance margin and cost-effectiveness results for the mixed-fuel and all-electric cases. Compliance margin is reported in the cells and cost-effectiveness is indicated by the color of the cell according to the following:

- Cells highlighted in green depict a positive compliance margin and cost-effective results using both On-Bill and TDV approaches.
- Cells highlighted in yellow depict a positive compliance margin and cost-effective results using either the On-Bill or TDV approach but not both.
- Cells not highlighted either depict a negative compliance margin (red text) or a package that was not cost-effective using either the On-Bill or TDV approach.

For more detail on the results, please refer to *Section 3.1* Mid-Rise Multifamily Results, *Appendix D – Detailed Results Mixed-Fuel* and *Appendix E – Detailed Results All-Electric*.

Table 13: Mid-Rise Multifamily Summary of Compliance Margin and Cost-Effectiveness

			Mixed-Fuel				All-Electric			
Climate Zone	Elec Utility	Gas Utility	No PV	0.1 kW_{DC} /Apt	0.2 kW_{DC} /Apt	0.3 kW_{DC} /Apt	No PV	0.1 kW_{DC} /Apt	0.2 kW_{DC} /Apt	0.3 kW_{DC} /Apt
CZ01	PGE	PGE	5.8%	5.8%	5.8%	5.8%	-0.4%	-0.4%	-0.4%	-0.4%
CZ02	PGE	PGE	5.9%	5.9%	5.9%	5.9%	1.6%	1.6%	1.6%	1.6%
CZ03	PGE	PGE	6.7%	6.7%	6.7%	6.7%	1.1%	1.1%	1.1%	1.1%
CZ04	PGE	PGE	6.6%	6.6%	6.6%	6.6%	3.4%	3.4%	3.4%	3.4%
CZ04-2	CPAU	CPAU	6.6%	6.6%	6.6%	6.6%	3.4%	3.4%	3.4%	3.4%
CZ05	PGE	PGE	6.7%	6.7%	6.7%	6.7%	1.3%	1.3%	1.3%	1.3%
CZ05-2	PGE	SCG	6.7%	6.7%	6.7%	6.7%	1.3%	1.3%	1.3%	1.3%
CZ06	SCE	SCG	7.1%	7.1%	7.1%	7.1%	3.7%	3.7%	3.7%	3.7%
CZ07	SDGE	SDGE	7.6%	7.6%	7.6%	7.6%	4.8%	4.8%	4.8%	4.8%
CZ08	SCE	SCG	7.0%	7.0%	7.0%	7.0%	3.9%	3.9%	3.9%	3.9%
CZ09	SCE	SCG	6.5%	6.5%	6.5%	6.5%	3.8%	3.8%	3.8%	3.8%
CZ10	SCE	SCG	6.5%	6.5%	6.5%	6.5%	1.8%	1.8%	1.8%	1.8%
CZ10-2	SDGE	SDGE	6.5%	6.5%	6.5%	6.5%	1.8%	1.8%	1.8%	1.8%
CZ11	PGE	PGE	6.8%	6.8%	6.8%	6.8%	2.0%	2.0%	2.0%	2.0%
CZ12	PGE	PGE	6.8%	6.8%	6.8%	6.8%	1.4%	1.4%	1.4%	1.4%
CZ12-2	SMUD	PGE	6.8%	6.8%	6.8%	6.8%	1.4%	1.4%	1.4%	1.4%
CZ13	PGE	PGE	7.3%	7.3%	7.3%	7.3%	2.6%	2.6%	2.6%	2.6%
CZ14	SCE	SCG	6.0%	6.0%	6.0%	6.0%	1.1%	1.1%	1.1%	1.1%
CZ14-2	SDGE	SDGE	6.0%	6.0%	6.0%	6.0%	1.1%	1.1%	1.1%	1.1%
CZ15	SCE	SCG	6.8%	6.8%	6.8%	6.8%	4.4%	4.4%	4.4%	4.4%
CZ16	PGE	PGE	7.4%	7.4%	7.4%	7.4%	-5.8%	-5.8%	-5.8%	-5.8%

5 References

California Energy Commission. 2017. Rooftop Solar PV System. Measure number: 2019-Res-PV-D Prepared by Energy and Environmental Economics, Inc. https://efiling.energy.ca.gov/getdocument.aspx?tn=221366

California Energy Commission. 2018a. 2019 Building Energy Efficiency Standards for Residential and Nonresidential Buildings. CEC-400-2018-020-CMF. December 2018. California Energy Commission. https://www.energy.ca.gov/2018publications/CEC-400-2018-020/CEC-400-2018-020-CMF.pdf

California Energy Commission. 2018b. 2019 Reference Appendices. CEC-400-2018-021-CMF. December 2018. California Energy Commission. https://www.energy.ca.gov/2018publications/CEC-400-2018-021/CEC-400-2018-021-CMF.pdf

California Energy Commission. 2019a. 2019 Nonresidential Alternative Calculation Method Reference Manual. CEC-400-2019-006-CMF. May 2019. California Energy Commission. https://ww2.energy.ca.gov/2019publications/CEC-400-2019-006/CEC-400-2019-006-CMF.pdf

California Energy Commission. 2019b. Executive Director Determination Pursuant to Section 150.1(c)8C for Central Heat Pump Water Heating System. December 26, 2019. https://efiling.energy.ca.gov/GetDocument.aspx?tn=231318&DocumentContentId=63067

Energy & Environmental Economics. 2019. Residential Building Electrification in California. April 2019. https://www.ethree.com/wp-content/uploads/2019/04/E3_Residential_Building_Electrification_in_California_April_2019.pdf

Horii, B., E. Cutter, N. Kapur, J. Arent, and D. Conotyannis. 2014. "Time Dependent Valuation of Energy for Developing Building Energy Efficiency Standards." http://www.energy.ca.gov/title24/2016standards/prerulemaking/documents/2014-07-09_workshop/2017_TDV_Documents/

Barbose, Galen and Darghouth, Naim. 2018. Tracking the Sun. Installed Price Trends for Distributed Photovoltaic Systems in the United States – 2018 Edition. Lawrence Berkeley National Laboratory. September 2018. https://emp.lbl.gov/sites/default/files/tracking_the_sun_2018_edition_final_0.pdf

Statewide CASE Team. 2014. Codes and Standards Enhancement (CASE) Initiative Nonresidential Opaque Envelope. December 2014. https://title24stakeholders.com/wp-content/uploads/2019/02/2016-T24-CASE-Report-NR-Opaque-Envelope-Dec2014-V3.pdf

Statewide CASE Team. 2017a. Codes and Standards Enhancement (CASE) Initiative High Performance Walls – Final Report. September 2017. http://title24stakeholders.com/wp-content/uploads/2017/09/2019-T24-CASE-Report_HPW_Final_September-2017.pdf

Statewide CASE Team. 2017b. Codes and Standards Enhancement (CASE) Initiative Residential High Performance Windows & Doors – Final Report. August 2017. http://title24stakeholders.com/wp-content/uploads/2017/09/2019-T24-CASE-Report_Res-Windows-and-Doors_Final_September-2017.pdf

Statewide CASE Team. 2017c. Codes and Standards Enhancement (CASE) Initiative Drain Water Heat Recovery – Final Report. July 2017. https://title24stakeholders.com/wp-content/uploads/2017/09/2019-T24-CASE-Report_DWHR_Final_September-2017.pdf

Statewide CASE Team. 2018. Energy Savings Potential and Cost-Effectiveness Analysis of High Efficiency Windows in California. Prepared by Frontier Energy. May 2018. https://www.etcc-ca.com/reports/energy-savings-potential-and-cost-effectiveness-analysis-high-efficiency-windows-california

Statewide CASE Team. 2020. All-Electric Multifamily Compliance Pathway Draft CASE Report. https://title24stakeholders.com/wp-content/uploads/2018/10/2022-T24-Draft-CASE-Report_MF-All-Electric.pdf

Statewide Reach Code Team. 2019a. 2019 Nonresidential New Construction Reach Code Cost Effectiveness Study. Prepared for Southern California Edison. Prepared by TRC. July 25, 2019. https://localenergycodes.com/download/801/file_path/fieldList/2019%20NR%20NC%20Cost%20Effectiveness%20Study-2019-07-25.pdf

Statewide Reach Code Te am. 2019b. 2019 Cost-effectiveness Study: Low-Rise Residential New Construction. Prepared for Pacific Gas and Electric Company. Prepared by Frontier Energy. August 1, 2019. https://localenergycodes.com/download/800/file_path/fieldList/2019%20Res%20NC%20Reach%20Codes

TRC. 2018. City of Palo Alto 2019 Title 24 Energy Reach Code Cost-effectiveness Analysis Draft. September 2018. https://cityofpaloalto.org/civicax/filebank/documents/66742

TRC. 2019. Multifamily Prototypes. June 7, 2019. Submitted to Southern California Edison. https://title24stakeholders.com/wp-content/uploads/2019/06/SCE-MFModeling_MultifamilyPrototypesReport_2019-06-07_clean.pdf

Appendix A – California Climate Zone Map

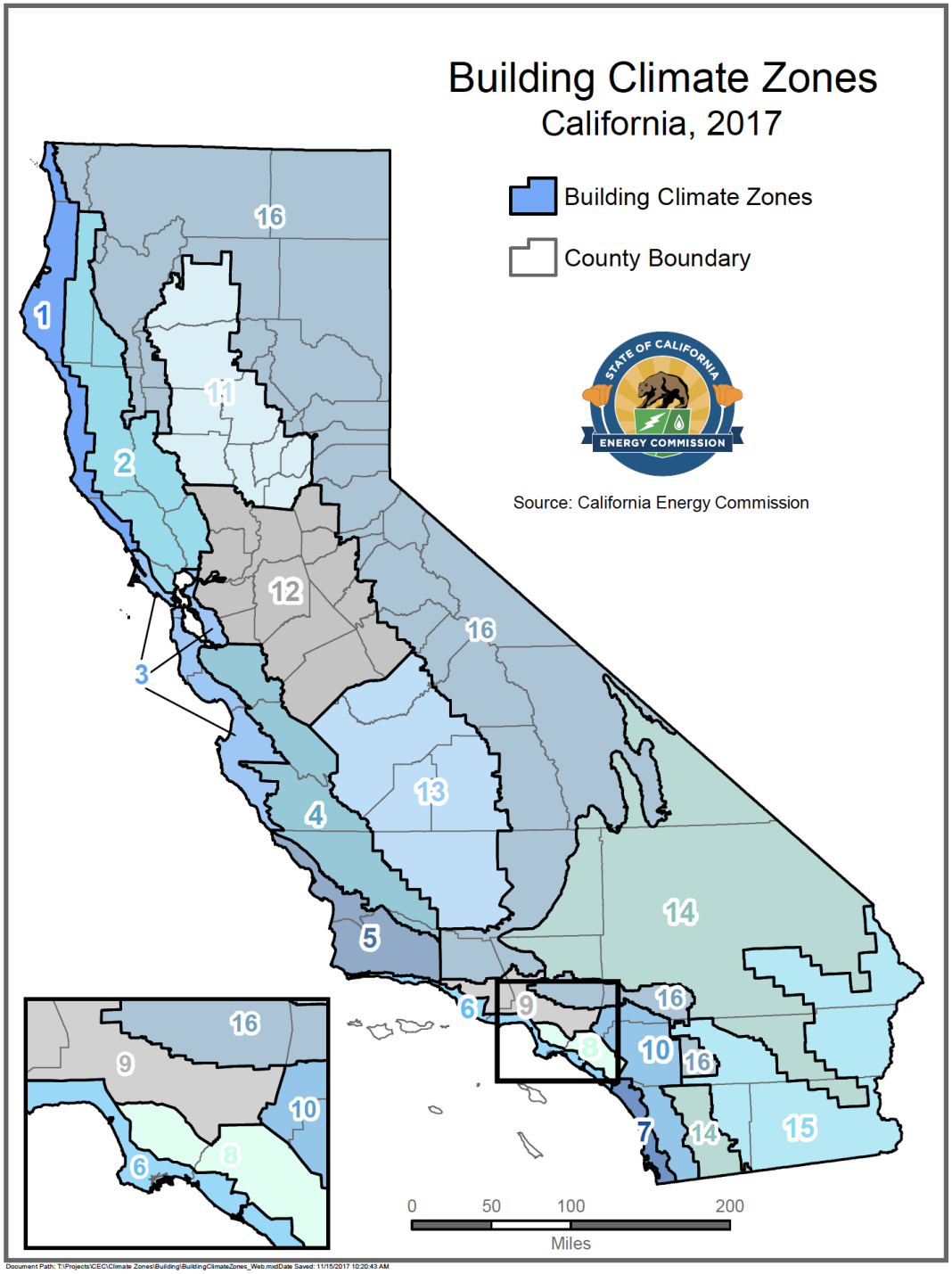

Figure 3: Map of California climate zones. (Source, California Energy Commission[3])

[3] https://ww2.energy.ca.gov/maps/renewable/building_climate_zones.html

Appendix B – Utility Tariff Details

PG&E 26
SCE 32
SoCalGas 35
SDG&E 38
SMUD 42
Escalation Assumptions 44

PG&E

The following pages provide details on the PG&E electricity and natural gas tariffs applied in this study. Table 14 describes the baseline territories that were assumed for each climate zone.

Table 14: PG&E Baseline Territory by Climate Zone

	Baseline Territory
CZ01	V
CZ02	X
CZ03	T
CZ04	X
CZ05	T
CZ11	R
CZ12	S
CZ13	R
CZ16	Y

The PG&E monthly gas rate in $/therm was applied on a monthly basis for the 12-month period ending April 2020 according to the rates shown in Table 15. Rates are based on historical data provided by PG&E.[4]

Table 15: PG&E Monthly Gas Rate ($/Therm)

Month	Procurement Charge	Transportation Charge		Total Charge	
		Baseline	Excess	Baseline	Excess
Jan 2020	$0.45813	$0.99712	$1.59540	$1.45525	$2.05353
Feb 2020	$0.44791	$0.99712	$1.59540	$1.44503	$2.04331
Mar 2020	$0.35346	$1.13126	$1.64861	$1.48472	$2.00207
Apr 2020	$0.23856	$1.13126	$1.64861	$1.36982	$1.88717
May 2019	$0.21791	$0.99933	$1.59892	$1.21724	$1.81683
June 2019	$0.20648	$0.99933	$1.59892	$1.20581	$1.80540
July 2019	$0.28462	$0.99933	$1.59892	$1.28395	$1.88354
Aug 2019	$0.30094	$0.96652	$1.54643	$1.26746	$1.84737
Sept 2019	$0.25651	$0.96652	$1.54643	$1.22303	$1.80294
Oct 2019	$0.27403	$0.98932	$1.58292	$1.26335	$1.85695
Nov 2019	$0.33311	$0.96729	$1.54767	$1.30040	$1.88078
Dec 2019	$0.40178[7/]	$0.96729	$1.54767	$1.36907	$1.94945

[4]The PG&E procurement and transportation charges were obtained from the following site: https://www.pge.com/tariffs/GRF.SHTML#RESGAS

Pacific Gas and Electric Company
U 39 San Francisco, California

Revised Cal. P.U.C. Sheet No. 46539-E
Cancelling Revised Cal. P.U.C. Sheet No. 46325-E

ELECTRIC SCHEDULE E-TOU-C Sheet 2
RESIDENTIAL TIME-OF-USE (PEAK PRICING 4 - 9 p.m. EVERY DAY)

RATES:
(Cont'd.)

E-TOU-C TOTAL RATES

Total Energy Rates ($ per kWh)	PEAK		OFF-PEAK	
Summer				
Total Usage	$0.41333	(I)	$0.34989	(I)
Baseline Credit (Applied to Baseline Usage Only)	($0.08633)	(R)	($0.08633)	(R)
Winter				
Total Usage	$0.31624	(I)	$0.29891	(I)
Baseline Credit (Applied to Baseline Usage Only)	($0.08633)	(R)	($0.08633)	(R)
Delivery Minimum Bill Amount ($ per meter per day)	$0.32854			
California Climate Credit (per household, per semi-annual payment occurring in the April and October bill cycles)[1]	($35.73)			(T)

Total bundled service charges shown on customer's bills are unbundled according to the component rates shown below. Where the delivery minimum bill amount applies, the customer's bill will equal the sum of (1) the delivery minimum bill amount plus (2) for bundled service, the generation rate times the number of kWh used. For revenue accounting purposes, the revenues from the delivery minimum bill amount will be assigned to the Transmission, Transmission Rate Adjustments, Reliability Services, Public Purpose Programs, Nuclear Decommissioning, Competition Transition Charges, Energy Cost Recovery Amount, DWR Bond, and New System Generation Charges based on kWh usage times the corresponding unbundled rate component per kWh, with any residual revenue assigned to Distribution.

[1] Pursuant to D.20-04-027, distribution of the October 2020 California Climate Credit will be advanced and split to the May 2020 and June 2020 bill cycles, $17.87 and $17.86 respectively.. (N) (N)

(Continued)

Advice 5661-E-B
Decision

Issued by
Robert S. Kenney
Vice President, Regulatory Affairs

Submitted April 28, 2020
Effective May 1, 2020
Resolution

Pacific Gas and Electric Company
U 39 San Francisco, California

	Revised	Cal. P.U.C. Sheet No.	46540-E
Cancelling	Revised	Cal. P.U.C. Sheet No.	46252-E

ELECTRIC SCHEDULE E-TOU-C Sheet 3
RESIDENTIAL TIME-OF-USE (PEAK PRICING 4 - 9 p.m. EVERY DAY)

RATES: (Cont'd.)

UNBUNDLING OF E-TOU-C TOTAL RATES

Energy Rates by Component ($ per kWh)	PEAK		OFF-PEAK	
Generation:				
Summer (all usage)	$0.16735	(R)	$0.11391	(R)
Winter (all usage)	$0.11859	(R)	$0.10356	(R)
Distribution:**				
Summer (all usage)	$0.12767	(I)	$0.11767	(I)
Winter (all usage)	$0.07935	(I)	$0.07705	(I)

Conservation Incentive Adjustment (Baseline Usage)	($0.03294)	(I)
Conservation Incentive Adjustment (Over Baseline Usage)	$0.05339	(I)
Transmission* (all usage)	$0.03595	
Transmission Rate Adjustments* (all usage)	$0.00314	
Reliability Services* (all usage)	($0.00066)	
Public Purpose Programs (all usage)	$0.01296	(I)
Nuclear Decommissioning (all usage)	$0.00101	(I)
Competition Transition Charges (all usage)	$0.00096	(R)
Energy Cost Recovery Amount (all usage)	$0.00005	(I)
DWR Bond (all usage)	$0.00580	
New System Generation Charge (all usage)**	$0.00571	(I)

* Transmission, Transmission Rate Adjustments and Reliability Service charges are combined for presentation on customer bills.
** Distribution and New System Generation Charges are combined for presentation on customer bills.

(Continued)

Advice	5661-E-B	Issued by	Submitted	April 28, 2020
Decision		**Robert S. Kenney**	Effective	May 1, 2020
		Vice President, Regulatory Affairs	Resolution	

Pacific Gas and Electric Company
U 39 San Francisco, California

Revised Cal. P.U.C. Sheet No. 46190-E
Cancelling Revised Cal. P.U.C. Sheet No. 43414-E

ELECTRIC SCHEDULE E-TOU-C Sheet 4 (T)
RESIDENTIAL TIME-OF-USE (PEAK PRICING 4 - 9 p.m. EVERY DAY)

SPECIAL CONDITIONS:

1. BASELINE (TIER 1) QUANTITIES: The following quantities of electricity are to be used to define usage eligible for the baseline credit (also see Rule 19 for additional allowances for medical needs):

BASELINE QUANTITIES (kWh PER DAY)

Baseline Territory*	Code B - Basic Quantities		Code H - All-Electric Quantities	
	Summer	Winter	Summer	Winter
	Tier I	Tier I	Tier I	Tier I
P	14.2	12.0	16.0	27.4
Q	10.3	12.0	8.9	27.4
R	18.6	11.3	20.9	28.1
S	15.8	11.1	18.7	24.9
T	6.8	8.2	7.5	13.6
V	7.5	8.8	10.9	16.9
W	20.2	10.7	23.6	20.0
X	10.3	10.5	8.9	15.4
Y	11.0	12.1	12.6	25.3
Z	6.2	8.1	7.0	16.5

2. TIME PERIODS FOR **E-TOU-C**: Times of the year and times of the day are defined as follows: (T)

Summer (service from June 1 through September 30):

Peak: 4:00 p.m. to 9:00 p.m. All days

Off-Peak: All other times

Winter (service from October 1 through May 31):

Peak: 4:00 p.m. to 9:00 p.m. All days

Off-Peak: All other times

* The applicable baseline territory is described in Part A of the Preliminary Statement

(Continued)

Advice 5759-E Issued by Submitted February 14, 2020
Decision D.19-07-004 **Robert S. Kenney** Effective March 1, 2020
Vice President, Regulatory Affairs Resolution

Pacific Gas and Electric Company
U 39 San Francisco, California

Revised Cal. P.U.C. Sheet No. 35762-G
Cancelling Revised Cal. P.U.C. Sheet No. 35696-G

GAS SCHEDULE GM Sheet 2
MASTER-METERED MULTIFAMILY SERVICE

RATES: Customers on this schedule pay a Procurement Charge and a Transportation Charge, per meter, as follows:

	Per Therm Baseline		Per Therm Excess	
Procurement Charge:	$0.23856	(R)	$0.23856	(R)
Transportation Charge:	$1.13126		$1.64861	
Total:	$1.36982	(R)	$1.88717	(R)
California Natural Gas Climate Credit (per Household, annual payment occurring in the April bill cycle)	($27.18)			

Public Purpose Program Surcharge:

Customers served under this schedule are subject to a gas Public Purpose Program (PPP) Surcharge under Schedule G-PPPS.

See Preliminary Statement, Part B for the Default Tariff Rate Components.

The Procurement Charge on this schedule is equivalent to the rate shown on informational Schedule G-CP—Gas Procurement Service to Core End-Use Customers.

Pacific Gas and Electric Company
U 39 San Francisco, California

Revised Cal. P.U.C. Sheet No. 35447-G
Cancelling Revised Cal. P.U.C. Sheet No. 34307-G

GAS SCHEDULE GM Sheet 3
MASTER-METERED MULTIFAMILY SERVICE

BASELINE QUANTITIES: The above rates are applicable only to residential use. PG&E may require the Customer to submit a completed "Declaration of Eligibility for Baseline Quantities for Residential Rates." The delivered quantities of gas shown below are billed at the rates for baseline use. As an exception, service under this schedule not used to supply space heating but used to supply water heating from a central source to residential dwelling units that are individually metered by PG&E for either gas or electricity will be billed using a baseline quantity of 0.5 therms per dwelling unit per day (Code W) in all baseline territories and in both seasons.

BASELINE QUANTITIES (Therms Per Day Per Dwelling Unit)

Baseline Territories **	Summer (April-October) Effective Apr. 1, 2020		Winter Off-Peak (Nov,Feb,Mar) Effective Nov. 1, 2019		Winter On-Peak (Dec, Jan) Effective Dec. 1, 2019		(T) | (T)
P	0.29	(R)	0.87	(R)	1.00	(I)	
Q	0.49	(R)	0.64	(R)	0.77	(I)	
R	0.33	(R)	0.84	(R)	1.19	(I)	
S	0.29	(R)	0.54	(R)	0.68	(I)	
T	0.49	(R)	0.94	(R)	1.06	(R)	
V	0.56		1.18	(R)	1.29	(I)	
W	0.23	(R)	0.61	(R)	0.87	(R)	
X	0.33	(R)	0.64	(R)	0.77	(I)	
Y	0.36		0.87	(R)	1.00	(I)	

SEASONAL CHANGES: The summer season is April-October, the winter off-peak season is November, February and March, and the winter on-peak season is December and January. Baseline quantities for bills that include the April 1, November 1 and December 1 seasonal changeover dates will be calculated by multiplying the applicable daily baseline quantity for each season by the number of days in each season for the billing period.

STANDARD MEDICAL QUANTITIES: Additional medical quantities (Code M) are available as provided in Rule 19.

RESIDENTIAL DWELLING UNITS: It is the responsibility of the Customer to advise PG&E within 15 days following any change in the number of residential dwelling units, mobile home spaces, and permanent-residence RV units receiving gas service.

CENTRAL BOILERS: Service to central boilers for water and/or space heating will be billed with monthly baseline quantities related to the number of dwelling units furnished such water and/or space heating.

SCE

The following pages provide details on are the SCE electricity tariffs applied in this study. Table 16 describes the baseline territories that were assumed for each climate zone.

Table 16: SCE Baseline Territory by Climate Zone

	Baseline Territory
CZ06	6
CZ08	8
CZ09	9
CZ10	10
CZ14	14
CZ15	15

Schedule TOU-D
TIME-OF-USE
DOMESTIC
(Continued)

Sheet 2

RATES

Customers receiving service under this Schedule will be charged the applicable rates under Option 4-9 PM, Option 4-9 PM-CPP, Option 5-8 PM, Option 5-8 PM-CPP, Option PRIME, Option PRIME-CPP Option A, Option A-CPP, Option B, or Option B-CPP, as listed below. CPP Event Charges will apply to all energy usage during CPP Event Energy Charge periods and CPP Non-Event Energy Credits will apply as a reduction on CPP Non-Event Energy Credit Periods during Summer Season weekdays, 4:00 p.m. to 9:00 p.m., as described in Special Conditions 1 and 3, below:

	Delivery Service		
Option 4-9 PM / Option 4-9 PM-CPP	Total[1]	UG***	DWREC[3]
Energy Charge - $/kWh			
Summer Season - On-Peak	0.21574 (I)	0.17870 (I)	(0.00007)
Mid-Peak	0.21574 (I)	0.10434 (R)	(0.00007)
Off-Peak	0.17099 (I)	0.07584 (R)	(0.00007)
Winter Season - Mid-Peak	0.21574 (I)	0.12676 (R)	(0.00007)
Off-Peak	0.17099 (I)	0.08874 (R)	(0.00007)
Super-Off-Peak	0.16567 (I)	0.07025 (R)	(0.00007)
Baseline Credit**** - $/kWh	(0.07456) (R)	0.00000	
Basic Charge - $/day			
Single-Family Residence	0.031		
Multi-Family Residence	0.024		
Minimum Charge** - $/day			
Single Family Residence	0.346		
Multi-Family Residence	0.346		
Minimum Charge (Medical Baseline)** - $/day			
Single Family Residence	0.173		
Multi-Family Residence	0.173		
California Climate Credit[4]	(37.00) (I)		
California Alternate Rates for			
Energy Discount - %	100.00*		
Family Electric Rate Assistance Discount - %	100.00		
Option 4-9 PM-CPP			
CPP Event Energy Charge - $/kWh		0.80000	
Summer CPP Non-Event Credit			
On-Peak Energy Credit - $/kWh		(0.15170)	
Maximum Available Credit - $/kWh*****			
Summer Season		(0.58504) (R)	

* Represents 100% of the discount percentage as shown in the applicable Special Condition of this Schedule.
** The Minimum Charge is applicable when the Delivery Service Energy Charge, plus the applicable Basic Charge is less than the Minimum Charge.
*** The ongoing Competition Transition Charge CTC of $0.00089 per kWh is recovered in the UG component of Generation. (I)
**** The Baseline Credit applies up to 100% of the Baseline Allocation, regardless of Time of Use. The Baseline Allocation is set forth in Preliminary Statement, Part H.
***** The Maximum Available Credit is the capped credit amount for CPP Customers dual participating in other demand response programs.
1 Total = Total Delivery Service rates are applicable to Bundled Service, Direct Access (DA) and Community Choice Aggregation Service (CCA Service) Customers, except DA and CCA Service Customers are not subject to the DWRBC rate component of this Schedule but instead pay the DWRBC as provided by Schedule DA-CRS or Schedule CCA-CRS.
2 Generation = The Gen rates are applicable only to Bundled Service Customers.
3 DWREC = Department of Water Resources (DWR) Energy Credit – For more information on the DWR Energy Credit, see the Billing Calculation Special Condition of this Schedule.
4 Applied on an equal basis, per household, semi-annually. See the Special Conditions of this Schedule for more information.

Schedule TOU-D
TIME-OF-USE
DOMESTIC
(Continued)

Sheet 12 (T)

SPECIAL CONDITIONS

1. Applicable rate time periods are defined as follows:

Option 4-9 PM, Option 4-9 PM-CPP, Option PRIME, Option PRIME-CPP : (T)

TOU Period	Weekdays		Weekends and Holidays	
	Summer	Winter	Summer	Winter
On-Peak	4 p.m. - 9 p.m.	N/A	N/A	N/A
Mid-Peak	N/A	4 p.m. - 9 p.m.	4 p.m. - 9 p.m.	4 p.m. - 9 p.m.
Off-Peak	All other hours	9 p.m. - 8 a.m.	All other hours	9 p.m. - 8 a.m.
Super-Off-Peak	N/A	8 a.m. - 4 p.m.	N/A	8 a.m. - 4 p.m.
CPP Event Period	4 p.m. - 9 p.m.	4 p.m. - 9 p.m.	N/A	N/A

Summer Daily Allocations (June through September)

Baseline Region Number	Daily kWh Allocation	All-Electric Allocation
5	17.2	17.9
6	11.4	8.8
8	12.6	9.8
9	16.5	12.4
10	18.9	15.8
13	22.0	24.6
14	18.7	18.3
15	46.4	24.1
16	14.4	13.5

Winter Daily Allocations (October through May)

Baseline Region Number	Daily kWh Allocation	All-Electric Allocation
5	18.7	29.1
6	11.3	13.0
8	10.6	12.7
9	12.3	14.3
10	12.5	17.0
13	12.6	24.3
14	12.0	21.3
15	9.9	18.2
16	12.6	23.1

SoCalGas

Following are the SoCalGas natural gas tariffs applied in this study. Table 17 describes the baseline territories that were assumed for each climate zone.

Table 17: SoCalGas Baseline Territory by Climate Zone

	Baseline Territory
CZ05	2
CZ06	1
CZ08	1
CZ09	1
CZ10	1
CZ14	2
CZ15	1

The SoCalGas monthly gas rate in $/therm was applied on a monthly basis for the 12-month period ending April 2020 according to the rates shown in Table 18. Historical natural gas rate data was only available for SoCalGas' procurement charges[5]. To estimate total costs by month, the baseline and excess transmission charges were assumed to be relatively consistence and applied for the entire year based on April 2020 costs.

Table 18: SoCalGas Monthly Gas Rate ($/Therm)

Month	Procurement Charge	Transmission Charge		Total Charge	
		Baseline	Excess	Baseline	Excess
Jan 2020	$0.34730	$0.81742	$1.17186	$1.16472	$1.51916
Feb 2020	$0.28008	$0.81742	$1.17186	$1.09750	$1.45194
Mar 2020	$0.22108	$0.81742	$1.17186	$1.03850	$1.39294
Apr 2020	$0.20307	$0.81742	$1.17186	$1.02049	$1.37493
May 2019	$0.23790	$0.81742	$1.17186	$1.05532	$1.40976
June 2019	$0.24822	$0.81742	$1.17186	$1.06564	$1.42008
July 2019	$0.28475	$0.81742	$1.17186	$1.10217	$1.45661
Aug 2019	$0.27223	$0.81742	$1.17186	$1.08965	$1.44409
Sept 2019	$0.26162	$0.81742	$1.17186	$1.07904	$1.43348
Oct 2019	$0.30091	$0.81742	$1.17186	$1.11833	$1.47277
Nov 2019	$0.27563	$0.81742	$1.17186	$1.09305	$1.44749
Dec 2019	$0.38067	$0.81742	$1.17186	$1.19809	$1.55253

[5] The SoCalGas procurement and transmission charges were obtained from the following site: https://www.socalgas.com/for-your-business/energy-market-services/gas-prices

SOUTHERN CALIFORNIA GAS COMPANY Revised CAL. P.U.C. SHEET NO. 57458-G
LOS ANGELES, CALIFORNIA CANCELING Revised CAL. P.U.C. SHEET NO. 57432-G

Schedule No. GM Sheet 2
MULTI-FAMILY SERVICE
(Includes GM-E, GM-C, GM-EC, GM-CC, GT-ME, GT-MC and all GMB Rates)
(Continued)

APPLICABILITY (Continued)

Multi-family Accommodations built prior to December 15, 1981 and currently served under this schedule may also be eligible for service under Schedule No. GS. If an eligible Multi-family Accommodation served under this schedule converts to an applicable submetered tariff, the tenant rental charges shall be revised for the duration of the lease to reflect removal of the energy related charges.

Eligibility for service hereunder is subject to verification by the Utility.

TERRITORY

Applicable throughout the service territory.

RATES

	GM/GT-M	GMB/GT-MB
Customer Charge, per meter, per day:	16.438¢	$16.357
For "Space Heating Only" customers, a daily Customer Charge applies during the winter period from November 1 through April 30[1/]:	33.149¢	

GM

	GM-E	GM-EC[3/]	GT-ME	
Baseline Rate, per therm (baseline usage defined per Special Conditions 3 and 4):				
Procurement Charge:[2/]	20.307¢	20.307¢	N/A	R
Transmission Charge:	81.742¢	81.742¢	81.742¢	
Total Baseline Charge (all usage):	102.049¢	102.049¢	81.742¢	R
Non-Baseline Rate, per therm (usage in excess of baseline usage):				
Procurement Charge:[2/]	20.307¢	20.307¢	N/A	R
Transmission Charge:	117.186¢	117.186¢	117.186¢	
Total Non Baseline Charge (all usage):	137.493¢	137.493¢	117.186¢	R

	GM-C	GM-CC[3/]	GT-MC	
Non-Baseline Rate, per therm (usage in excess of baseline usage):				
Procurement Charge:[2/]	20.307¢	20.307¢	N/A	R
Transmission Charge:	117.186¢	117.186¢	117.186¢	
Total Non Baseline Charge (all usage):	137.493¢	137.493¢	117.186¢	R

[1/] For the summer period beginning May 1 through October 31, with some exceptions, usage will be accumulated to at least 20 Ccf (100 cubic feet) before billing, or it will be included with the first bill of the heating season which may cover the entire duration since a last bill was generated for the current calendar year.
(Footnotes continue next page.)

(Continued)

(TO BE INSERTED BY UTILITY)
ADVICE LETTER NO. 5614
DECISION NO.
2C7

ISSUED BY
Dan Skopec
Vice President
Regulatory Affairs

(TO BE INSERTED BY CAL. PUC)
SUBMITTED Apr 6, 2020
EFFECTIVE Apr 10, 2020
RESOLUTION NO. G-3351

SOUTHERN CALIFORNIA GAS COMPANY Revised CAL. P.U.C. SHEET NO. 57168-G
LOS ANGELES, CALIFORNIA CANCELING Revised CAL. P.U.C. SHEET NO. 41015-G

Schedule No. GM Sheet 5
MULTI-FAMILY SERVICE
(Includes GM-E, GM-C, GM-EC, GM-CC, GT-ME, GT-MC and all GMB Rates)
(Continued)

SPECIAL CONDITIONS (Continued)

3. (Continued)

Codes	Per Residence	Daily Therm Allowance for Climate Zones* 1	2	3
1	Space heating only			
	Summer	0.000	0.000	0.000
	Winter	1.210	1.343	2.470
2	Water heating and cooking	0.477	0.477	0.477
3	Cooking, water heating and space heating			
	Summer	0.473	0.473	0.473
	Winter	1.691	1.823	2.950
4	Cooking and space heating			
	Summer	0.088	0.088	0.088
	Winter	1.299	1.432	2.559
5	Cooking only	0.089	0.089	0.089
6	Water heating only	0.388	0.388	0.388
7	Water heating and space heating			
	Summer	0.385	0.385	0.385
	Winter	1.601	1.734	2.861

* Climate Zones are described in the Preliminary Statement.

4. Medical Baseline: Upon completion of an application and verification by a state-licensed physician, nurse practitioner, physician's assistant, or osteopath (Form No. 4859-E), an additional Baseline allowance of 0.822 therms per day will be provided for paraplegic, quadriplegic, or hemiplegic persons, those afflicted with multiple sclerosis or scleroderma, or persons being treated for a life threatening illness or who have a compromised immune system. T N

   Where it is established that the energy required for a Life-Support Device, as defined in Rule No. 1, exceeds 0.822 therms per day, an additional uniform daily Baseline allowance will be provided. The amount of the additional allowance will be determined by the Utility from load and operating time data of the Life-Support Device.

5. Space Heating Only: Applies to customers who are using gas primarily for space heating, as determined by survey or under the presumption that customers who use less than 11 Ccf per month during each of the regular billing periods ending in August and September qualify for Heat Only billing.

(Continued)

(TO BE INSERTED BY UTILITY)
ADVICE LETTER NO. 5576-A
DECISION NO. 02-04-026

ISSUED BY
Dan Skopec
Vice President

(TO BE INSERTED BY CAL. PUC)
SUBMITTED Jan 31, 2020
EFFECTIVE Feb 27, 2020

SDG&E

Following are the SDG&E electricity and natural gas tariffs applied in this study. Table 19 describes the baseline territories that were assumed for each climate zone. All-Electric baseline allowances were applied.

Table 19: SDG&E Baseline Territory by Climate Zone

	Baseline Territory
CZ07	Coastal
CZ10	Inland
CZ14	Mountain

San Diego Gas & Electric Company
San Diego, California

Revised Cal. P.U.C. Sheet No. 33144-E
Canceling Revised Cal. P.U.C. Sheet No. 32930-E

SCHEDULE TOU-DR1
RESIDENTIAL TIME-OF-USE

Sheet 2

RATES

Total Rates:

Description – TOU DR1	UDC Total Rate		DWR-BC Rate	EECC Rate + DWR Credit		Total Rate	
Summer:							
On-Peak	0.22374	I	0.00580	0.29042	R	0.51996	R
Off-Peak	0.22374	I	0.00580	0.09305	R	0.32259	R
Super Off-Peak	0.22374	I	0.00580	0.04743	R	0.27697	R
Winter:							
On-Peak	0.25734	R	0.00580	0.07844	R	0.34158	R
Off-Peak	0.25734	R	0.00580	0.06961	R	0.33275	R
Super Off-Peak	0.25734	R	0.00580	0.05981	R	0.32295	R
Summer Baseline Adjustment Credit up to 130% of Baseline	(0.07506)	I				(0.07506)	I
Winter Baseline Adjustment Credit up to 130% of Baseline	(0.06833)	I				(0.06833)	I
Minimum Bill ($/day)	0.338					0.338	

Note:
(1) Total Rates consist of UDC, Schedule DWR-BC (Department of Water Resources Bond Charge), and Schedule EECC (Electric Energy Commodity Cost) rates, with the EECC rates reflecting a DWR Credit.
(2) Total Rates presented are for customers that receive commodity supply and delivery service from Utility.
(3) DWR-BC charges do not apply to CARE customers.
(4) As identified in the rates tables, customer bills will also include line-item summer and winter credits for usage up to 130% of baseline to provide the rate capping benefits adopted by Assembly Bill 1X and Senate Bill 695.

(Continued)

2C8
Advice Ltr. No. 3514-E
Decision No. D.20-01-021

Issued by
Dan Skopec
Vice President
Regulatory Affairs

Submitted Mar 26, 2020
Effective Apr 1, 2020
Resolution No.

Time Periods

All time periods listed are applicable to local time. The definition of time will be based upon the date service is rendered.

TOU Periods – Weekdays	Summer	Winter
On-Peak	4:00 p.m. – 9:00 p.m.	4:00 p.m. – 9:00 p.m.
Off-Peak	6:00 a.m. – 4:00 p.m.; 9:00 p.m. - midnight	6:00 a.m. – 4:00 p.m. Excluding 10:00 a.m. – 2:00 p.m. in March and April; 9:00 p.m. - midnight
Super Off-Peak	Midnight – 6:00 a.m.	Midnight – 6:00 a.m. 10:00 a.m. – 2:00 p.m. in March and April
TOU Period – Weekends and Holidays	Summer	Winter
On-Peak	4:00 p.m. – 9:00 p.m.	4:00 p.m. – 9:00 p.m.
Off-Peak	2:00 p.m. – 4:00 p.m.; 9:00 p.m. - midnight	2:00 p.m. – 4:00 p.m.; 9:00 p.m. - midnight
Super Off-Peak	Midnight – 2:00 p.m.	Midnight – 2:00 p.m.

Seasons:	Summer	June 1 – October 31
	Winter	November 1 – May 31

Baseline Usage: The following quantities of electricity are used to calculate the baseline adjustment credit.

	Baseline Allowance For Climatic Zones*			
	Coastal	Inland	Mountain	Desert
Basic Allowance				
Summer (June 1 to October 31)	9.0	10.4	13.6	15.9
Winter (November 1 to May 31)	9.2	9.6	12.9	10.9
All Electric**				
Summer (June 1 to October 31)	6.8	9.2	15,6	17.5
Winter (November 1 to May 31)	10.4	13.4	23.4	18.1

* Climatic Zones are shown on the Territory Served, Map No. 1.

** All Electric allowances are available upon application to those customers who have permanently installed space heating or who have electric water heating and receive no energy from another source.

San Diego Gas & Electric Company
San Diego, California

Revised Cal. P.U.C. Sheet No. 24487-G
Canceling Revised Cal. P.U.C. Sheet No. 24422-G

SCHEDULE GM

Sheet 2

MULTI-FAMILY NATURAL GAS SERVICE
(Includes Rates for GM, GM-C and GTC/GTCA)

RATES

	GM		GM-C	GTC/GTCA[1]
Baseline Rate, per therm (baseline usage defined in Special Condition 4)				
Procurement Charge[2]	$0.20327	R	$0.22130	N/A
Transmission Charge	$1.35946		$1.35946	$1.37374
Total Baseline Charge	$1.56273	R	$1.58076	$1.37374
Non-Baseline Rate (usage in excess of baseline usage)				
Procurement Charge[2]	$0.20327	R	$0.22130	N/A
Transmission Charge	$1.59125		$1.59125	$1.60553
Total Non-Baseline Charge	$1.79452	R	$1.81255	$1.60553
Minimum Bill, per day[3]				
Non-CARE customers	$0.09863		$0.09863	$0.09863
CARE customers	$0.07890		$0.07890	$0.07890

(Continued)

2C6
Issued by
Dan Skopec
Vice President
Regulatory Affairs

Submitted Mar 31, 2020
Effective Apr 1, 2020
Resolution No.

Advice Ltr. No. 2858-G
Decision No.

Baseline Usage. The following quantities of gas are to be billed at the baseline rate for multi-family units. Usage in excess of applicable baseline usage will be billed at non-baseline rates.

	Daily Therm Allowance Per Residential Unit
Summer (May 1 to October 31, inclusive)	0.345
Winter (November 1 to April 30, inclusive)	1.082

The SDG&E monthly gas rate in $/therm was applied on a monthly basis for the 12-month period ending April 2020 according to the rates shown in Table 20. Historical natural gas rate data was only available for SoCalGas' procurement charges[6]. To estimate total costs by month, the baseline and excess transmission charges were assumed to be relatively consistence and applied for the entire year based on April 2020 costs.

Table 20: SDG&E Monthly Gas Rate ($/Therm)

Month	Procurement Charge	Transmission Charge		Total Charge	
		Baseline	Excess	Baseline	Excess
Jan 2020	$0.34761	$1.36166	$1.59166	$1.70927	$1.93927
Feb 2020	$0.28035	$1.36166	$1.59166	$1.64201	$1.87201
Mar 2020	$0.22130	$1.36166	$1.59166	$1.58296	$1.81296
Apr 2020	$0.20327	$1.35946	$1.59125	$1.56273	$1.79452
May 2019	$0.23804	$1.06349	$1.25253	$1.30153	$1.49057
June 2019	$0.24838	$1.06349	$1.25253	$1.31187	$1.50091
July 2019	$0.28491	$1.06349	$1.25253	$1.34840	$1.53744
Aug 2019	$0.27239	$1.06349	$1.25253	$1.33588	$1.52492
Sept 2019	$0.26178	$1.06349	$1.25253	$1.32527	$1.51431
Oct 2019	$0.30109	$1.06349	$1.25253	$1.36458	$1.55362
Nov 2019	$0.27580	$1.06349	$1.25253	$1.33929	$1.52833
Dec 2019	$0.38090	$1.06349	$1.25253	$1.44439	$1.63343

[6] The SDG&E procurement and transmission charges were obtained from the following sets of documents:
http://regarchive.sdge.com/tm2/pdf/GAS_GAS-SCHEDS_GM_2020.pdf
http://regarchive.sdge.com/tm2/pdf/GAS_GAS-SCHEDS_GM_2019.pdf

SMUD

Following are the SMUD electricity tariffs applied in this study.

RTOD Rate Schedule

II. Firm Service Rates

A. Time-of-Day (5-8 p.m.) Rate	**Rate Category RT02**
Non-Summer Prices* – January 1 through May 31	
System Infrastructure Fixed Charge per month	$21.05
Electricity Usage Charge	
Peak $/kWh	$0.1388
Off-Peak $/kWh	$0.1006
Summer Prices - June 1 through September 30	
System Infrastructure Fixed Charge per month	$21.05
Electricity Usage Charge	
Peak $/kWh	$0.2941
Mid-Peak $/kWh	$0.1671
Off-Peak $/kWh	$0.1209
Non-Summer Prices* – October 1 through December 31	
System Infrastructure Fixed Charge per month	$21.70
Electricity Usage Charge	
Peak $/kWh	$0.1430
Off-Peak $/kWh	$0.1035

* Non-Summer Season includes Fall (Oct 1 – Nov 30), Winter (Dec 1 – Mar 31) and Spring (Apr 1 – May 31) periods.

Summer (Jun 1 - Sept 30)	**Peak**	Weekdays between 5:00 p.m. and 8:00 p.m.
	Mid-Peak	Weekdays between noon and midnight except during the Peak hours.
	Off-Peak	All other hours, including weekends and holidays[1].
Non-Summer (Oct 1 - May 31)	**Peak**	Weekdays between 5:00 p.m. and 8:00 p.m.
	Off-Peak	All other hours, including weekends and holidays[1].

GSN_T Rate Schedule:

II. Firm Service Rates

Rate Category	Nondemand GSN_T	Flat GFN	Demand GSS_T
Winter Season – January 1 through May 31			
System Infrastructure Fixed Charge - per month per meter	$21.15	$9.45	$25.75
Site Infrastructure Charge *(per 12 months max kW or contract capacity)*	n/a	n/a	$7.94
Electricity Usage Charge			
All day $/kWh	$0.1365	$0.1381	$0.1071
Summer Season - June 1 through September 30			
System Infrastructure Fixed Charge - per month per meter	$21.15	$9.45	$25.75
Site Infrastructure Charge *(per 12 months max kW or contract capacity)*	n/a	n/a	$7.94
Electricity Usage Charge			
On-peak $/kWh	$0.3151	$0.1381	$0.2733
Off-peak $/kWh	$0.1152	$0.1381	$0.0948

Rate Category	Nondemand GSN_T	Flat GFN	Demand GSS_T
Winter Season - October 1 through December 31			
System Infrastructure Fixed Charge - per month per meter	$21.80	$9.70	$26.50
Site Infrastructure Charge *(per 12 months max kW or contract capacity)*	n/a	n/a	$8.18
Electricity Usage Charge			
All day $/kWh	$0.1406	$0.1423	$0.1103

D. Billing Periods

1. **Winter (October 1 – May 31) All hours are off-peak.**

2. **Summer Time-of-Use Billing Periods (June 1 – September 30)**

On-Peak	Summer weekdays between 3:00 p.m. and 6:00 p.m.
Off-Peak	All other hours, including holidays shown below

CPAU

Following are the CPAU electricity and natural gas tariffs applied in this study.

E1 Rate Schedule:

RESIDENTIAL ELECTRIC SERVICE

UTILITY RATE SCHEDULE E-1

A. APPLICABILITY:

This Rate Schedule applies to separately metered single-family residential dwellings receiving Electric Service from the City of Palo Alto Utilities.

B. TERRITORY:

This rate schedule applies everywhere the City of Palo Alto provides Electric Service.

C. UNBUNDLED RATES:

Per kilowatt-hour (kWh)	Commodity	Distribution	Public Benefits	Total
Tier 1 usage	$0.08339	$0.04971	$0.00447	$0.13757
Tier 2 usage Any usage over Tier 1	0.11569	0.07351	0.00447	0.19367
Minimum Bill ($/day)				0.3283

E2 Rate Schedule:

RESIDENTIAL MASTER-METERED AND SMALL NON-RESIDENTIAL ELECTRIC SERVICE

UTILITY RATE SCHEDULE E-2

A. APPLICABILITY:

This Rate Schedule applies to the following Customers receiving Electric Service from the City of Palo Alto Utilities:

1. Small non-residential Customers receiving Non-Demand Metered Electric Service; and
2. Customers with Accounts at Master-Metered multi-family facilities.

B. TERRITORY:

This rate schedule applies everywhere the City of Palo Alto provides Electric Service.

C. UNBUNDLED RATES:

Per kilowatt-hour (kWh)	Commodity	Distribution	Public Benefits	Total
Summer Period	$0.11855	$0.08551	$0.00447	$0.20853
Winter Period	0.08502	0.05675	0.00447	0.14624
Minimum Bill ($/day)				0.8359

G-2 Rate Schedule:

RESIDENTIAL MASTER-METERED AND COMMERCIAL GAS SERVICE

UTILITY RATE SCHEDULE G-2

A. APPLICABILITY:

This schedule applies to the following Customers receiving Gas Service from the City of Palo Alto Utilities:

1. Commercial Customers who use less than 250,000 therms per year at one site.
2. Master-metered residential Customers in multi-family residential facilities.

B. TERRITORY:

This schedule applies anywhere the City of Palo Alto provides Gas Service.

C. UNBUNDLED RATES: Per Service

Monthly Service Charge: $104.95

Per Therm

Supply Charges:

1. Commodity (Monthly Market Based) ..... $0.10-$2.00
2. Cap and Trade Compliance Charges $0.00-0.25
3. Transportation Charge.....$0.00-$0.15
4. Carbon Offset Charge .....$0.00-$0.10

Distribution Charge: $0.6102

G2 Monthly Per Therm Rates:

Effective Date	Commodity Rate	Cap and Trade Compliance Charge	Transportation Charge	Carbon Offset Charge	G2 Total Volumetric Rate
1/1/20	$0.3289	0.033	0.09941	0.040	1.11151
2/1/20	0.2466	0.033	0.09941	0.040	1.02921
3/1/20	0.2416	0.033	0.09891	0.040	1.02371
4/1/20	0.2066	0.033	0.09891	0.040	0.98871
5/1/20	0.2258	0.033	0.09891	0.040	1.00791
6/1/20	0.2279	0.033	0.09891	0.040	1.01001
7/1/19	0.2471	0.033	0.11757	0.040	1.04787
j8/1/19	0.2507	0.033	0.10066	0.040	1.03456
9/1/19	0.2461	0.033	0.10066	0.040	1.02996
10/1/19	0.2811	0.033	0.10288	0.040	1.06718
11/1/19	0.2923	0.033	0.10288	0.040	1.07838
12/1/19	0.3781	0.033	0.10288	0.040	1.16418

Escalation Assumptions

The average annual escalation rates in the following table were used in this study and are from E3's 2019 study Residential Building Electrification in California (Energy & Environmental Economics, 2019). These rates are applied to the 2019 rate schedules over a 30-year period beginning in 2020. SDG&E was not covered in the E3 study. The Statewide Reach Code Team reviewed SDG&E's GRC filing and applied the same approach that E3 applied for PG&E and SoCalGas to arrive at average escalation rates between 2020 and 2022. The statewide electricity escalation rates were also applied to the analysis for SMUD and CPAU. PG&E gas escalation rates were applied to CPAU as the best available estimate since CPAU uses PG&E gas infrastructure.

Table 21: Real Utility Rate Escalation Rate Assumptions

	Statewide Electric Residential Average Rate (%/year, real)	Natural Gas Residential Core Rate (%/yr escalation, real)		
		PG&E	SoCalGas	SDG&E
2020	2.0%	1.48%	6.37%	5.00%
2021	2.0%	5.69%	4.12%	3.14%
2022	2.0%	1.11%	4.12%	2.94%
2023	2.0%	4.0%	4.0%	4.0%
2024	2.0%	4.0%	4.0%	4.0%
2025	2.0%	4.0%	4.0%	4.0%
2026	1.0%	1.0%	1.0%	1.0%
2027	1.0%	1.0%	1.0%	1.0%
2028	1.0%	1.0%	1.0%	1.0%
2029	1.0%	1.0%	1.0%	1.0%
2030	1.0%	1.0%	1.0%	1.0%
2031	1.0%	1.0%	1.0%	1.0%
2032	1.0%	1.0%	1.0%	1.0%
2033	1.0%	1.0%	1.0%	1.0%
2034	1.0%	1.0%	1.0%	1.0%
2035	1.0%	1.0%	1.0%	1.0%
2036	1.0%	1.0%	1.0%	1.0%
2037	1.0%	1.0%	1.0%	1.0%
2038	1.0%	1.0%	1.0%	1.0%
2039	1.0%	1.0%	1.0%	1.0%
2040	1.0%	1.0%	1.0%	1.0%
2041	1.0%	1.0%	1.0%	1.0%
2042	1.0%	1.0%	1.0%	1.0%
2043	1.0%	1.0%	1.0%	1.0%
2044	1.0%	1.0%	1.0%	1.0%
2045	1.0%	1.0%	1.0%	1.0%
2046	1.0%	1.0%	1.0%	1.0%
2047	1.0%	1.0%	1.0%	1.0%
2048	1.0%	1.0%	1.0%	1.0%
2049	1.0%	1.0%	1.0%	1.0%

Appendix C – PG&E Gas Infrastructure Cost Memo

Pacific Gas and Electric Company

Janice Berman
Director – Grid Edge
Pacific Gas and Electric Company
Mail Code B9F
P.O. Box 770000
San Francisco, CA 94177-00001

December 5, 2019

Energy Commission Staff:

On March 2, 2018, PG&E provided gas extension cost estimates for residential existing and new subdivisions (see attached memo). We have recently updated our estimates and are therefore providing an updated memo.

In addition to mainline and service extension costs, we are also providing estimates of the cost of gas meters for different building types including both residential and commercial customers. These estimates are based on PG&E historical jobs.

Developing gas extension cost estimates is complex and the actual costs are project dependent. Costs vary widely with location, terrain, distance to the nearest main, joint trenching, materials, number of dwellings per development, and several other site and job-specific conditions. For these reasons, it is not practical to come up with estimates that represent every case. Instead we are including estimates based on historical averages taken from projects within PG&E's territory. It is not recommended to compare specific project costs to these estimates as any number of factors could lead to higher or lower costs than these averages are representing.

We are also including estimates for in-house gas infrastructure costs and specific plan review costs. These estimates are from external sources, and are not based on PG&E data, but have been provided for the sake of completeness and for use in energy efficiency analysis.

To further anchor the estimates, several assumptions have been made:

1. It is assumed that during new construction, gas infrastructure will likely be joint trenched with electric infrastructure. As a result, the incremental cost of trenching associated with the gas infrastructure alone is minimal. Therefore, all mainline cost estimates exclude trench costs. Service extension cost estimates include both estimates with and without trench costs. In the case where new construction would require overhead electric and underground gas infrastructure, the estimates with trench costs included for service extensions should be utilized.

2. It is assumed that new construction in an existing subdivision would not generally require a mainline extension. In cases where a mainline extension would be required to an existing subdivision, the costs are highly dependent on the location, terrain, and distance to the nearest main.

Pacific Gas and Electric Company

Janice Berman
Director – Grid Edge
Pacific Gas and Electric Company
Mail Code B9F
P.O. Box 770000
San Francisco, CA 94177-00001

3. These estimates are for total costs. The cost estimates have not been reduced to account for the portion of the costs paid by all customers due to application of Rule 15[1] and Rule 16[2] allowances. Hence, costs to the specific customer may be lower than the estimates below, as the specific customer benefits from the Rule 15 and Rule 16 allowances.

Table 1: PG&E Gas Infrastructure Cost Estimates

	Existing Subdivision/Development	New Greenfield Subdivision/Development
Mainline Extension	N/A[3]	Single-Family $17/ft[4] Multi-Family $11/ft[4]
Service Extension (Typically 1" pipe from mainline to the meter)	$6750 per service/building[4] (excludes trench costs) $9200 per service/building[4] (includes trench costs)	$1300 per service/building[4] (includes mainline extension costs within the subdivision; excludes trench costs) $1850 per service/building[4] (includes mainline extension costs within the subdivision; includes trench costs)
Meter	Residential Single Family $300 per meter[5] Residential Multi-Family $300 per meter + $300 per meter manifold outlet[5] Small/Medium Commercial $3600 per meter[6]	Residential Single Family $300 per meter[5] Residential Multi-Family $300 per meter + $300 per meter manifold outlet[5] Small/Medium Commercial $3600 per meter[6]

[1] https://www.pge.com/tariffs/tm2/pdf/ELEC_RULES_15.pdf
[2] https://www.pge.com/tariffs/tm2/pdf/ELEC_RULES_16.pdf
[3] It is assumed that new construction in an existing subdivision would not require a main extension.
[4] Estimates based on PG&E jobs from Jan 2016 - Dec 2017 from PG&E's Service Planning team.
[5] Estimates from PG&E's Dedicated Estimating Team. For Multi-Family units, the costs of $300 per meter and $300 per meter manifold outlet should be combined for a total of $600 per meter.
[6] PG&E Marginal Customer Access Cost Estimates presented in the 2018 Gas Cost Allocation Proceedings (GCAP), A.17-09-006, Exhibit PG&E-2, Appendix A, Section A, Table A-1. The Average Connection Cost per Customer values were included in the MCAC workpaper that accompanied the GCAP testimony

Pacific Gas and Electric Company

Janice Berman
Director – Grid Edge
Pacific Gas and Electric Company
Mail Code B9F
P.O. Box 770000
San Francisco, CA 94177-00001

	Large Commercial $32,000 per meter[6]	Large Commercial $32,000 per meter[6]

Note: Service extension cost estimates for New Greenfield Subdivisions include mainline extension costs as well. Therefore, mainline cost estimates can be ignored for the purpose of estimating total project costs.

Table 2: Gas Infrastructure Cost Estimates from Other Sources

	Existing Subdivision/Development	New Greenfield Subdivision/Development
In-House Infrastructure	Single-Family $800[7] Multi-Family $600 per unit[7] Medium Office $600-4500[7,8] Medium Retail $10,000[8]	Single-Family $800[7] Multi-Family $600 per unit[7] Medium Office $600-4500[7,8] Medium Retail $10,000[8]
Plan Review (Will vary by city and often not a fixed fee)	Residential Palo Alto - $850[9] Nonresidential Palo Alto - $2316[9]	Residential Palo Alto - $850[9] Nonresidential Palo Alto - $2316[9]

Please let us know if there are any follow-up questions or clarifications.

Best regards,

[7] Frontier Energy, Inc., Misti Bruceri & Associates, LLC. 2019. "2019 Cost-effectiveness Study: Low Rise Residential New Construction." Available at: https://localenergycodes.com/content/performance-ordinances
[8] TRC, EnergySoft. 2019. "2019 Nonresidential New Construction Reach Code Cost Effectiveness Study." Available at: https://localenergycodes.com/content/performance-ordinances
[9] TRC. 2018. "City of Palo Alto 2019 Title 24 Energy Reach Code Cost Effectiveness Analysis Draft." Available at: http://cityofpaloalto.org/civicax/filebank/documents/66742

Appendix D – Detailed Results Mixed-Fuel

Table 22: Mixed-Fuel Efficiency Only Package Results (SAVINGS/COST PER APARTMENT)[1]

			Apartments			Central Water Heating			Total	Savings (2020 PV$)			B/C Ratio[1]	
Climate Zone	Elec Utility	Gas Utility	Gas Savings (therms)	Elec Savings (kWh)	Year 1 Utility Cost Savings	Gas Savings (therms)	Elec Savings (kWh)	Year 1 Utility Cost Savings	Year 1 Utility Cost Savings	On-Bill Utility Cost Savings	TDV Cost Savings	Total Inc. Cost ($)	On-Bill	TDV
CZ01	PGE	PGE	0.0	26	$6	0.0	0	$0	$6	$133	$105	$304	0.44	0.35
CZ02	PGE	PGE	0.0	47	$17	0.0	0	$0	$17	$391	$285	$144	2.72	1.98
CZ03	PGE	PGE	0.0	44	$15	0.0	0	$0	$15	$345	$226	$144	2.40	1.57
CZ04	PGE	PGE	0.0	61	$20	0.0	0	$0	$20	$465	$331	$144	3.24	2.31
CZ04-2	CPAU	CPAU	0.0	61	$10	0.0	0	$0	$10	$248	$331	$144	1.73	2.31
CZ05	PGE	PGE	0.0	42	$14	0.0	0	$0	$14	$320	$206	$144	2.22	1.43
CZ05-2	PGE	SCG	0.0	42	$14	0.0	0	$0	$14	$320	$206	$144	2.22	1.43
CZ06	SCE	SCG	0.0	74	$18	0.0	0	$0	$18	$424	$351	$144	2.95	2.44
CZ07	SDGE	SDGE	0.0	81	$25	0.0	0	$0	$25	$593	$374	$144	4.13	2.60
CZ08	SCE	SCG	0.0	84	$20	0.0	0	$0	$20	$484	$420	$144	3.37	2.92
CZ09	SCE	SCG	0.0	83	$20	0.0	0	$0	$20	$468	$441	$144	3.26	3.06
CZ10	SCE	SCG	0.0	82	$17	0.0	0	$0	$17	$410	$427	$144	2.85	2.97
CZ10-2	SDGE	SDGE	0.0	82	$25	0.0	0	$0	$25	$599	$427	$144	4.16	2.97
CZ11	PGE	PGE	0.0	104	$27	0.0	0	$0	$27	$637	$635	$625	1.02	1.02
CZ12	PGE	PGE	0.0	93	$24	0.0	0	$0	$24	$572	$568	$304	1.88	1.87
CZ12-2	SMUD	PGE	0.0	93	$13	0.0	0	$0	$13	$319	$568	$304	1.05	1.87
CZ13	PGE	PGE	0.0	132	$34	0.0	0	$0	$34	$798	$779	$625	1.28	1.25
CZ14	SCE	SCG	0.0	80	$17	0.0	0	$0	$17	$407	$449	$304	1.34	1.48
CZ14-2	SDGE	SDGE	0.0	80	$24	0.0	0	$0	$24	$576	$449	$304	1.90	1.48
CZ15	SCE	SCG	0.0	145	$30	0.0	0	$0	$30	$719	$802	$625	1.15	1.28
CZ16	PGE	PGE	0.0	117	$27	0.0	0	$0	$27	$646	$563	$625	1.03	0.90

[1] Values in red indicate B/C ratios less than 1.

Table 23: Mixed-Fuel Efficiency + PV Package Results (SAVINGS/COST PER APARTMENT)[1]

			0.1 kW_{DC} per Apartment					0.2 kW_{DC} per Apartment				
Climate Zone	Elec Utility	Gas Utility	On-Bill Utility Cost Savings (2020 PV$)	TDV Cost Savings (2020 PV$)	Total Inc. Cost	On-Bill B/C Ratio	TDV B/C Ratio	On-Bill Utility Cost Savings (2020 PV$)	TDV Cost Savings (2020 PV$)	Total Inc. Cost	On-Bill B/C Ratio	TDV B/C Ratio
CZ01	PGE	PGE	$885	$597	$620	1.43	0.96	$1,637	$1,090	$937	1.75	1.16
CZ02	PGE	PGE	$1,411	$877	$460	3.07	1.91	$2,431	$1,469	$777	3.13	1.89
CZ03	PGE	PGE	$1,373	$812	$460	2.98	1.76	$2,400	$1,397	$777	3.09	1.80
CZ04	PGE	PGE	$1,522	$947	$460	3.31	2.06	$2,579	$1,562	$777	3.32	2.01
CZ04-2	CPAU	CPAU	$807	$947	$460	1.75	2.06	$1,335	$1,562	$777	1.72	2.01
CZ05	PGE	PGE	$1,400	$834	$460	3.04	1.81	$2,480	$1,461	$777	3.19	1.88
CZ05-2	PGE	SCG	$1,400	$834	$460	3.04	1.81	$2,480	$1,461	$777	3.19	1.88
CZ06	SCE	SCG	$1,206	$969	$460	2.62	2.11	$1,987	$1,587	$777	2.56	2.04
CZ07	SDGE	SDGE	$1,701	$1,010	$460	3.69	2.19	$2,770	$1,647	$777	3.57	2.12
CZ08	SCE	SCG	$1,272	$1,064	$460	2.76	2.31	$2,059	$1,708	$777	2.65	2.20
CZ09	SCE	SCG	$1,181	$1,091	$460	2.57	2.37	$1,876	$1,742	$777	2.41	2.24
CZ10	SCE	SCG	$1,104	$1,054	$460	2.40	2.29	$1,797	$1,681	$777	2.31	2.16
CZ10-2	SDGE	SDGE	$1,622	$1,054	$460	3.52	2.29	$2,646	$1,681	$777	3.41	2.16
CZ11	PGE	PGE	$1,537	$1,256	$942	1.63	1.33	$2,438	$1,877	$1,258	1.94	1.49
CZ12	PGE	PGE	$1,462	$1,181	$620	2.36	1.90	$2,352	$1,794	$937	2.51	1.91
CZ12-2	SMUD	PGE	$772	$1,181	$620	1.25	1.90	$1,226	$1,794	$937	1.31	1.91
CZ13	PGE	PGE	$1,673	$1,372	$942	1.78	1.46	$2,548	$1,965	$1,258	2.03	1.56
CZ14	SCE	SCG	$1,165	$1,175	$620	1.88	1.89	$1,923	$1,901	$937	2.05	2.03
CZ14-2	SDGE	SDGE	$1,697	$1,175	$620	2.74	1.89	$2,819	$1,901	$937	3.01	2.03
CZ15	SCE	SCG	$1,423	$1,456	$942	1.51	1.55	$2,128	$2,110	$1,258	1.69	1.68
CZ16	PGE	PGE	$1,606	$1,191	$942	1.71	1.26	$2,567	$1,818	$1,258	2.04	1.44

[1] Values in red indicate B/C ratios less than 1.

Table 24: Mixed-Fuel Efficiency + PV Package Results, cont. (SAVINGS/COST PER APARTMENT)[1]

			0.3 kW_{DC} per Apartment					1 kW_{DC} per Apartment				
Climate Zone	Elec Utility	Gas Utility	On-Bill Utility Cost Savings (2020 PV$)	TDV Cost Savings (2020 PV$)	Total Inc. Cost	On-Bill B/C Ratio	TDV B/C Ratio	On-Bill Utility Cost Savings (2020 PV$)	TDV Cost Savings (2020 PV$)	Total Inc. Cost	On-Bill B/C Ratio	TDV B/C Ratio
CZ01	PGE	PGE	$2,389	$1,582	$1,253	1.91	1.26	$7,466	$5,029	$3,469	2.15	1.45
CZ02	PGE	PGE	$3,452	$2,061	$1,093	3.16	1.88	$9,590	$6,203	$3,309	2.90	1.87
CZ03	PGE	PGE	$3,428	$1,982	$1,093	3.14	1.81	$9,687	$6,079	$3,309	2.93	1.84
CZ04	PGE	PGE	$3,635	$2,177	$1,093	3.32	1.99	$9,992	$6,483	$3,309	3.02	1.96
CZ04-2	CPAU	CPAU	$1,863	$2,177	$1,093	1.70	1.99	$5,184	$6,483	$3,309	1.57	1.96
CZ05	PGE	PGE	$3,561	$2,089	$1,093	3.26	1.91	$10,109	$6,482	$3,309	3.05	1.96
CZ05-2	PGE	SCG	$3,561	$2,089	$1,093	3.26	1.91	$10,109	$6,482	$3,309	3.05	1.96
CZ06	SCE	SCG	$2,769	$2,206	$1,093	2.53	2.02	$7,593	$6,534	$3,309	2.29	1.97
CZ07	SDGE	SDGE	$3,805	$2,283	$1,093	3.48	2.09	$10,818	$6,739	$3,309	3.27	2.04
CZ08	SCE	SCG	$2,838	$2,352	$1,093	2.60	2.15	$7,543	$6,861	$3,309	2.28	2.07
CZ09	SCE	SCG	$2,570	$2,393	$1,093	2.35	2.19	$7,285	$6,948	$3,309	2.20	2.10
CZ10	SCE	SCG	$2,490	$2,308	$1,093	2.28	2.11	$7,197	$6,697	$3,309	2.17	2.02
CZ10-2	SDGE	SDGE	$3,670	$2,308	$1,093	3.36	2.11	$10,636	$6,697	$3,309	3.21	2.02
CZ11	PGE	PGE	$3,338	$2,498	$1,575	2.12	1.59	$9,480	$6,846	$3,791	2.50	1.81
CZ12	PGE	PGE	$3,242	$2,406	$1,253	2.59	1.92	$9,299	$6,694	$3,469	2.68	1.93
CZ12-2	SMUD	PGE	$1,680	$2,406	$1,253	1.34	1.92	$4,855	$6,694	$3,469	1.40	1.93
CZ13	PGE	PGE	$3,423	$2,558	$1,575	2.17	1.62	$9,402	$6,709	$3,791	2.48	1.77
CZ14	SCE	SCG	$2,682	$2,626	$1,253	2.14	2.10	$7,820	$7,707	$3,469	2.25	2.22
CZ14-2	SDGE	SDGE	$3,940	$2,626	$1,253	3.14	2.10	$11,557	$7,707	$3,469	3.33	2.22
CZ15	SCE	SCG	$2,832	$2,764	$1,575	1.80	1.76	$7,676	$7,342	$3,791	2.03	1.94
CZ16	PGE	PGE	$3,527	$2,445	$1,575	2.24	1.55	$10,032	$6,836	$3,791	2.65	1.80

[1] Values in red indicate B/C ratios less than 1.

Appendix E – Detailed Results All-Electric

Table 25: All-Electric Efficiency Only Package Results (SAVINGS/COST PER APARTMENT)[1,2]

			Apartments			Central Water Heating			Total	Savings (2020 PV$)			B/C Ratio	
Climate Zone	Elec Utility	Gas Utility	Gas Savings (therms)	Elec Savings (kWh)	Year 1 Utility Cost Savings	Gas Savings (therms)	Elec Savings (kWh)	Year 1 Utility Cost Savings	Year 1 Utility Cost Savings	On-Bill Utility Cost Savings	TDV Cost Savings	Total Inc. Cost ($)	On-Bill	TDV
CZ01	PGE	PGE	0.0	26	$6	124.6	-899	-$46	-$40	-$674	$199	-$446	0.7	>1
CZ02	PGE	PGE	0.0	48	$17	114.3	-810	-$38	-$21	-$238	$528	-$606	2.5	>1
CZ03	PGE	PGE	0.0	44	$15	114.9	-811	-$38	-$23	-$287	$390	-$606	2.1	>1
CZ04	PGE	PGE	0.0	62	$20	110.7	-775	-$35	-$15	-$102	$625	-$606	6.0	>1
CZ04-2	CPAU	CPAU	0.0	62	$11	110.7	-775	-$5	$5	$345	$625	-$606	>1	>1
CZ05	PGE	PGE	0.0	42	$14	117.3	-830	-$40	-$26	-$350	$391	-$606	1.7	>1
CZ05-2	PGE	SCG	0.0	42	$14	117.3	-830	-$66	-$53	-$827	$391	-$606	0.7	>1
CZ06	SCE	SCG	0.0	74	$18	107.0	-744	-$28	-$10	$153	$612	-$606	>1	>1
CZ07	SDGE	SDGE	0.0	81	$25	105.9	-734	-$43	-$18	-$58	$665	-$606	10.4	>1
CZ08	SCE	SCG	0.0	84	$20	103.6	-717	-$27	-$6	$227	$693	-$606	>1	>1
CZ09	SCE	SCG	0.0	83	$20	103.5	-716	-$27	-$7	$212	$739	-$606	>1	>1
CZ10	SCE	SCG	0.0	83	$17	90.0	-709	-$40	-$23	-$214	$396	-$853	4.0	>1
CZ10-2	SDGE	SDGE	0.0	83	$25	90.0	-709	-$59	-$34	-$478	$396	-$853	1.8	>1
CZ11	PGE	PGE	0.0	104	$27	91.1	-723	-$46	-$19	-$241	$430	-$371	1.5	>1
CZ12	PGE	PGE	0.0	93	$24	93.9	-755	-$51	-$27	-$414	$288	-$693	1.7	>1
CZ12-2	SMUD	PGE	0.0	93	$13	93.9	-755	$22	$36	$1,060	$288	-$693	>1	>1
CZ13	PGE	PGE	0.0	132	$34	89.6	-711	-$45	-$11	-$62	$505	-$371	6.0	>1
CZ14	SCE	SCG	0.0	80	$17	92.2	-733	-$42	-$25	-$258	$305	-$693	2.7	>1
CZ14-2	SDGE	SDGE	0.0	80	$24	92.2	-733	-$61	-$36	-$532	$305	-$693	1.3	>1
CZ15	SCE	SCG	0.0	145	$30	73.8	-554	-$28	$3	$332	$832	-$371	>1	>1
CZ16	PGE	PGE	0.0	119	$28	107.8	-896	-$64	-$37	-$621	$127	-$371	0.6	>1

[1] Values in red indicate B/C ratios less than 1.

[2] ">1" indicates cases where there are both incremental measure cost savings and energy cost savings.

Table 26: Table 19: All-Electric Efficiency + PV Package Results (SAVINGS/COST PER APARTMENT)[1,2]

			0.1 kW_{DC} per Apartment					0.2 kW_{DC} per Apartment				
Climate Zone	Elec Utility	Gas Utility	On-Bill Utility Cost Savings (2020 PV$)	TDV Cost Savings (2020 PV$)	Total Inc. Cost	On-Bill B/C Ratio	TDV B/C Ratio	On-Bill Utility Cost Savings (2020 PV$)	TDV Cost Savings (2020 PV$)	Total Inc. Cost	On-Bill B/C Ratio	TDV B/C Ratio
CZ01	PGE	PGE	$78	$692	-$129	>1	>1	$830	$1,184	$187	4.44	6.33
CZ02	PGE	PGE	$782	$1,120	-$289	>1	>1	$1,802	$1,712	$27	65.85	62.55
CZ03	PGE	PGE	$741	$975	-$289	>1	>1	$1,768	$1,560	$27	64.62	57.02
CZ04	PGE	PGE	$955	$1,240	-$289	>1	>1	$2,012	$1,855	$27	73.51	67.79
CZ04-2	CPAU	CPAU	$904	$1,240	-$289	>1	>1	$1,432	$1,855	$27	52.33	67.79
CZ05	PGE	PGE	$730	$1,018	-$289	>1	>1	$1,810	$1,646	$27	66.14	60.14
CZ05-2	PGE	SCG	$254	$1,018	-$289	>1	>1	$1,334	$1,646	$27	48.74	60.14
CZ06	SCE	SCG	$935	$1,231	-$289	>1	>1	$1,716	$1,849	$27	62.71	67.56
CZ07	SDGE	SDGE	$1,049	$1,302	-$289	>1	>1	$2,118	$1,938	$27	77.41	70.82
CZ08	SCE	SCG	$1,014	$1,337	-$289	>1	>1	$1,802	$1,981	$27	65.83	72.37
CZ09	SCE	SCG	$924	$1,390	-$289	>1	>1	$1,619	$2,040	$27	59.16	74.56
CZ10	SCE	SCG	$480	$1,023	-$536	>1	>1	$1,173	$1,650	-$219	>1	>1
CZ10-2	SDGE	SDGE	$546	$1,023	-$536	>1	>1	$1,570	$1,650	-$219	>1	>1
CZ11	PGE	PGE	$660	$1,052	-$55	>1	>1	$1,560	$1,673	$262	5.96	6.39
CZ12	PGE	PGE	$476	$900	-$376	>1	>1	$1,366	$1,513	-$60	>1	>1
CZ12-2	SMUD	PGE	$1,513	$900	-$376	>1	>1	$1,967	$1,513	-$60	>1	>1
CZ13	PGE	PGE	$813	$1,098	-$55	>1	>1	$1,687	$1,691	$262	6.44	6.46
CZ14	SCE	SCG	$500	$1,031	-$376	>1	>1	$1,259	$1,757	-$60	>1	>1
CZ14-2	SDGE	SDGE	$589	$1,031	-$376	>1	>1	$1,710	$1,757	-$60	>1	>1
CZ15	SCE	SCG	$1,037	$1,485	-$55	>1	>1	$1,741	$2,139	$262	6.65	8.17
CZ16	PGE	PGE	$339	$754	-$55	>1	>1	$1,299	$1,381	$262	4.96	5.27

[1] Values in red indicate B/C ratios less than 1.

[2] ">1" indicates cases where there are both incremental measure cost savings and energy cost savings. Values in red indicate B/C ratios less than 1.0

Table 27: All-Electric Package Results with PV, cont. (SAVINGS/COST PER APARTMENT) [1,2]

			0.3 kW_{DC} per Apartment					1.0 kW_{DC} per Apartment				
Climate Zone	Elec Utility	Gas Utility	On-Bill Utility Cost Savings (2020 PV$)	TDV Cost Savings (2020 PV$)	Total Inc. Cost	On-Bill B/C Ratio	TDV B/C Ratio	On-Bill Utility Cost Savings (2020 PV$)	TDV Cost Savings (2020 PV$)	Total Inc. Cost	On-Bill B/C Ratio	TDV B/C Ratio
CZ01	PGE	PGE	$1,582	$1,676	$504	3.14	3.33	$6,660	$5,123	$2,719	2.45	1.88
CZ02	PGE	PGE	$2,822	$2,304	$344	8.21	6.70	$8,960	$6,446	$2,560	3.50	2.52
CZ03	PGE	PGE	$2,796	$2,146	$344	8.13	6.24	$9,055	$6,242	$2,560	3.54	2.44
CZ04	PGE	PGE	$3,069	$2,470	$344	8.92	7.18	$9,425	$6,777	$2,560	3.68	2.65
CZ04-2	CPAU	CPAU	$1,960	$2,470	$344	5.70	7.18	$5,281	$6,777	$2,560	2.06	2.65
CZ05	PGE	PGE	$2,890	$2,274	$344	8.40	6.61	$9,439	$6,667	$2,560	3.69	2.60
CZ05-2	PGE	SCG	$2,414	$2,274	$344	7.02	6.61	$8,962	$6,667	$2,560	3.50	2.60
CZ06	SCE	SCG	$2,498	$2,467	$344	7.26	7.17	$7,322	$6,796	$2,560	2.86	2.65
CZ07	SDGE	SDGE	$3,154	$2,575	$344	9.17	7.49	$10,166	$7,030	$2,560	3.97	2.75
CZ08	SCE	SCG	$2,581	$2,625	$344	7.51	7.63	$7,286	$7,133	$2,560	2.85	2.79
CZ09	SCE	SCG	$2,314	$2,691	$344	6.73	7.83	$7,028	$7,247	$2,560	2.75	2.83
CZ10	SCE	SCG	$1,866	$2,277	$97	19.22	23.46	$6,573	$6,666	$2,313	2.84	2.88
CZ10-2	SDGE	SDGE	$2,594	$2,277	$97	26.72	23.46	$9,560	$6,666	$2,313	4.13	2.88
CZ11	PGE	PGE	$2,461	$2,294	$578	4.25	3.97	$8,602	$6,641	$2,794	3.08	2.38
CZ12	PGE	PGE	$2,256	$2,125	$257	8.78	8.28	$8,313	$6,413	$2,473	3.36	2.59
CZ12-2	SMUD	PGE	$2,421	$2,125	$257	9.43	8.28	$5,596	$6,413	$2,473	2.26	2.59
CZ13	PGE	PGE	$2,562	$2,284	$578	4.43	3.95	$8,541	$6,435	$2,794	3.06	2.30
CZ14	SCE	SCG	$2,017	$2,482	$257	7.85	9.67	$7,155	$7,563	$2,473	2.89	3.06
CZ14-2	SDGE	SDGE	$2,831	$2,482	$257	11.02	9.67	$10,448	$7,563	$2,473	4.23	3.06
CZ15	SCE	SCG	$2,445	$2,793	$578	4.23	4.83	$7,289	$7,371	$2,794	2.61	2.64
CZ16	PGE	PGE	$2,260	$2,009	$578	3.91	3.47	$8,764	$6,399	$2,794	3.14	2.29

[1] Values in red indicate B/C ratios less than 1.

[2] ">1" indicates cases where there are both incremental measure cost savings and energy cost savings. Values in red indicate B/C ratios less than 1.0